AD-A047 881 RCA GOVERNMENT AND COMMERCIAL SYSTEMS BURLINGTON MASS--ETC F/G 9/5
BATTERY CHARGER PP-7286 ( )/U.(U)
DEC 77 J WOODWARD, S WALDSTEIN DAAB07-74-C-0270

UNCLASSIFIED ECOM-74-0270-F NL

| OF |
ADA047881

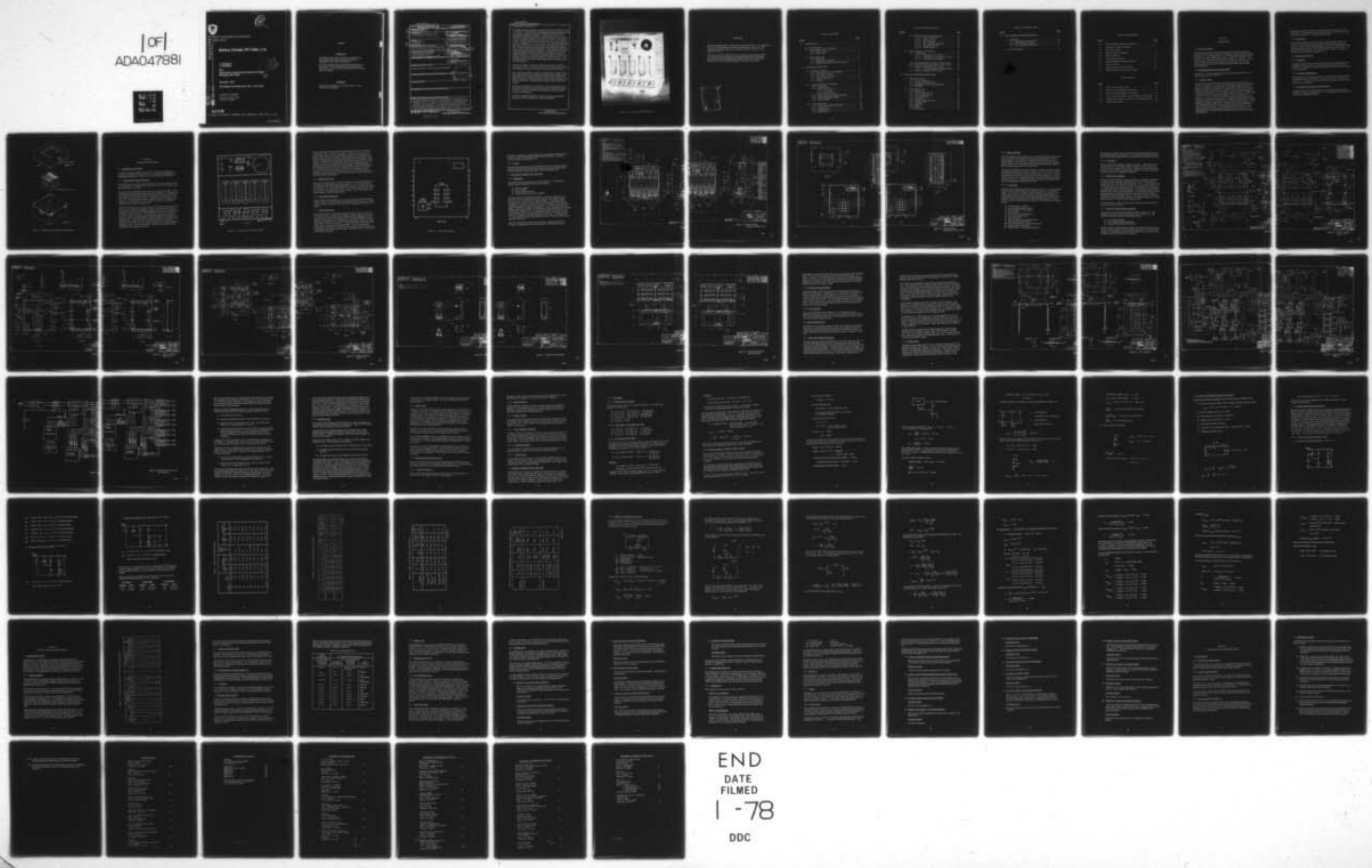

END
DATE FILMED
1-78
DDC

AD A047881

Research and Development Technical Report
ECOM-74-0270-F

Battery Charger PP-7286 ( )/U

J. Woodward
S. Waldstein

RCA
Government and Commercial Systems Division
Burlington, MA 01803

DDC
RECEIVED
DEC 22 1977
F

December 1977

Final Report for Period July 1976 - June 1977

DISTRIBUTION STATEMENT
Approved for public release;
distribution unlimited.

AD No. ____ DDC FILE COPY

ECOM
US ARMY ELECTRONICS COMMAND FORT MONMOUTH, NEW JERSEY 07703

HISA FM 2957-73

NOTICES

Disclaimers

The findings in this report are not to be construed as an official Department of the Army position, unless so designated by other authorized documents.

The citation of trade names and names of manufacturers in this report is not to be construed as official Government indorsement or approval of commercial products or services referenced herein.

Disposition

Destroy this report when it is no longer needed. Do not return it to the originator.

UNCLASSIFIED

SECURITY CLASSIFICATION OF THIS PAGE (When Data Entered)

REPORT DOCUMENTATION PAGE	READ INSTRUCTIONS BEFORE COMPLETING FORM
1. REPORT NUMBER: ECOM-74-0270-F	2. GOVT ACCESSION NO. / 3. RECIPIENT'S CATALOG NUMBER
4. TITLE (and Subtitle): Battery Charger PP-7286 ( )/U .	5. TYPE OF REPORT & PERIOD COVERED: Final Report, July 1976-June 1977
	6. PERFORMING ORG. REPORT NUMBER
7. AUTHOR(s): J. Woodward, S. Waldstein	8. CONTRACT OR GRANT NUMBER(s): DAAB07-74-C-0270
9. PERFORMING ORGANIZATION NAME AND ADDRESS: RCA/Government and Commercial Systems, Automated Systems, Burlington, Mass. 01803	10. PROGRAM ELEMENT, PROJECT, TASK AREA & WORK UNIT NUMBERS: 1E764723 DL 71-0301
11. CONTROLLING OFFICE NAME AND ADDRESS: Army Electronics Command, ATTN: DRSEL-TL-PE, Fort Monmouth, New Jersey 07703	12. REPORT DATE: Dec 1977 / 13. NUMBER OF PAGES: 82 p.
14. MONITORING AGENCY NAME & ADDRESS(if different from Controlling Office)	15. SECURITY CLASS. (of this report): Unclassified / 15a. DECLASSIFICATION/DOWNGRADING SCHEDULE

16. DISTRIBUTION STATEMENT (of this Report)

Approved for public release; distribution unlimited.

DDC RECEIVED DEC 22 1977 E

17. DISTRIBUTION STATEMENT (of the abstract entered in Block 20, if different from Report)

18. SUPPLEMENTARY NOTES

19. KEY WORDS (Continue on reverse side if necessary and identify by block number)

20. ABSTRACT (Continue on reverse side if necessary and identify by block number)

The Battery Charger PP-7286 ( )/U was developed to support the Laser Rangefinder MX-9838 ( )/GVS-5 which is powered by a rechargeable nickel cadmium battery, type BB-516 ( )/U and other Army equipment using generically similar batteries. The technical characteristics are described in ECOM Development Specification Number EL-CP2128-0001A. The hardware developed consisted of the Battery Charger PP-7286 ( )/U and its

DD FORM 1 JAN 73 1473 EDITION OF 1 NOV 68 IS OBSOLETE

UNCLASSIFIED

SECURITY CLASSIFICATION OF THIS PAGE (When Data Entered)

409516

Transit Case CY-7670 ( )/U.

The Battery Charger operates from prime power of 115 or 230 V (± 10%) 47 to 63 Hz ac. It provides five independently adjustable charging circuits, each capable of being set to charge at constant current rates from 15 through 700 milliamperes inclusive. A multiple scale meter can be switched to measure current in each of the five channels. The circuits provide constant current into any load from zero volts (short circuit) to 36 volts. A digital timer common to all circuits can be set in tenths of an hour increments from 0.1 to 19.1 hours. Time remaining in the charging cycle is displayed by an incandescent, seven segment, 3 digit display. An internal primary battery provides nonvolatile memory for the charger in the event of power interruption. A sixth position on the meter switch allows the voltage of this battery to be measured. Five battery holders for BB-516 or smaller batteries are provided on the battery charger front panel. Each channel output also appears at a pair of binding posts on the panel to permit connection to external batteries. All charging channels are fused to protect against battery reversal or other overload conditions.

The Battery Charger is slightly less than one cubic foot in volume; it weighs about 35 lbs., is louvered for natural convection cooling, and fits into a transit case which is provided for transportation and storage.

The Transit Case protects the Battery Charger against vibration, shock, and immersion which may be encountered during transportation, handling, and storage. Its outer shell is molded fiberglass on which is installed the necessary hardware-latches, gaskets, humidity indicator and pressure relief valve. An internal foam cushion supports the battery charger.

The Battery Charger met or exceeded all of its required performance characteristics and had adequate design margin to withstand overvoltage to 20% above high line voltage and any undervoltage condition without damage to the equipment.

The Electro-Magnetic Interference Tests were passed satisfactorily negating the need for additional screening and shielding.

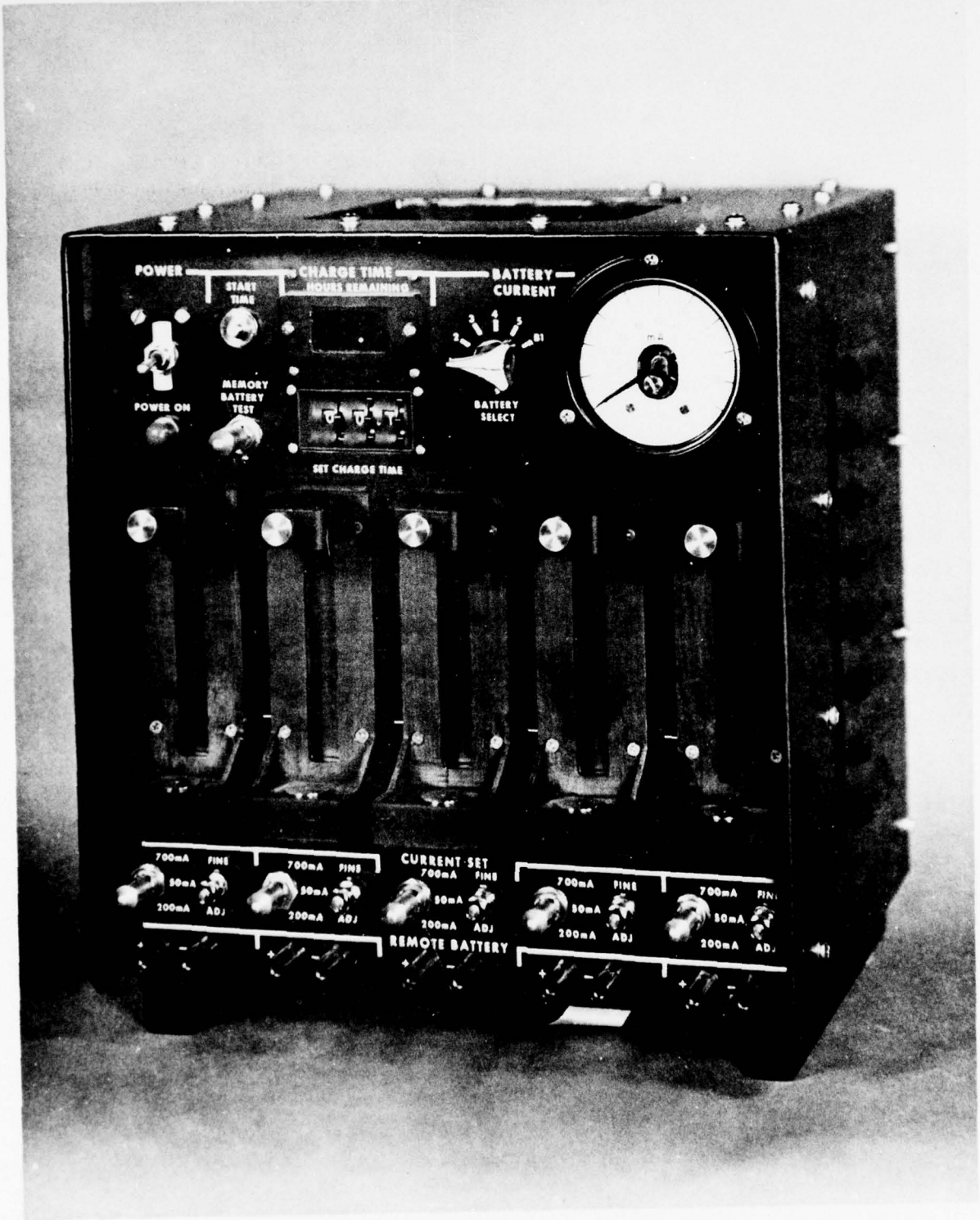

Frontispiece - Battery Charger PP-7286( )/U

FOREWORD

This Final Technical Report for the Battery Charger PP-7286 ( )/U was prepared by RCA Automated Systems, Burlington, Massachusetts, under U.S. Army Electronics Command Contract No. DAAB07-74-C-0270, Project No. 1E7 64723 DL 71 03 01.

This report covers the effort of the RCA technical and manufacturing staff of the Government Systems Division, Automated Systems plant in Burlington, Massachusetts with consulting support relative to materials and processes from the RCA Central Engineering activity in Camden, New Jersey.

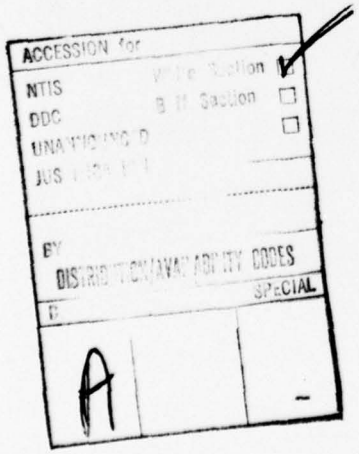

TABLE OF CONTENTS

Section		Page
1.0	INTRODUCTION	1
1.1	Scope of Report	1
1.2	Summary Description of Equipment	1
1.2.1	Battery Charger	1
1.2.2	Transit Case	2
1.3	Related Documents	2
1.3.1	Design Plan	2
1.3.2	Development Specification	2
1.3.3	Manufacturing Drawings and Specifications	2
2.0	DESIGN IMPLEMENTATION	4
2.1	Operational Features	4
2.1.1	Front Panel Controls and Displays	4
2.1.2	Rear Panel Controls	6
2.1.3	Other Operator Features	6
2.1.4	Current Adjustment	6
2.1.5	Timing	8
2.2	Mechanical Design and Packaging	8
2.2.1	Configuration	8
2.2.2	Chassis Assembly	13
2.2.2.1	Front Panel	13
2.2.2.2	Rear Panel	14
2.2.3	Battery Holder Assembly	14
2.2.4	Printed Wiring Board Basket Assembly	14
2.2.5	Printed Wiring Board Design	25
2.2.6	Cover Assembly	25
2.3	Circuit Description	25
2.3.1	Prime Power Supply and Controls	25
2.3.2	Timing Circuit	26
2.3.3	Charging Circuit	34
2.3.4	Meter Circuit	35

TABLE OF CONTENTS (CONT.)

Section		Page
2.3.5	Modifications from the Design Plan	35
2.3.5.1	Power Transformer	35
2.3.5.2	Bleeder Resistor	36
2.3.5.3	Meter Switching	36
2.3.5.4	Meter Multiplier Adjustment	36
2.3.5.5	Decoupling Capacitor	36
2.3.5.6	Voltage Limiter	36
2.4	Battery Charger Circuit Analysis	36
2.4.1	Power Supply	37
2.4.1.1	Transformer T1 AC Inputs	37
2.4.1.2	Transformer T1 AC Outputs (No Load)	37
2.4.1.3	Overvoltage Test Condition	37
2.4.2	Switching Regulator Reference Voltage Analysis	38
2.4.3	Worst Case Switching Transistor Peak Current	43
2.4.4	Analysis of Metering Circuit Accuracy	44
2.4.4.1	Current Metering and Sensing Circuits	44
2.4.5	Analysis of Charging Time Variation	51
3.0	TEST AND DEMONSTRATION SUMMARY	59
3.1	Performance Tests	59
3.1.1	Current Regulation	59
3.1.2	Memory and Timing Circuit	61
3.1.3	Maintainability and Human Engineering	61
3.1.4	Reliability	61
3.2	Environmental Tests	61
3.2.1	Altitude Test	63
3.2.2	High Temperature Test	63
3.2.3	Low Temperature Test	63
3.2.4	Sand and Dust Test	63
3.2.5	Humidity Test	64
3.2.6	Leakage (Immersion) Test	66
3.2.7	Vibration Test	66
3.2.8	Shock Test	67
3.2.9	Fungus	67
3.2.10	Salt Fog Test	67

TABLE OF CONTENTS (CONT.)

Section		Page
4.0	CONCLUSIONS AND RECOMMENDATIONS	71
4.1	Conclusions	71
4.1.1	Performance Characteristics	71
4.1.2	Environmental Resistance	71
4.1.3	Electro-Magnetic Interference	71
4.2	Recommendations	72

LIST OF ILLUSTRATIONS

Figure		Page
1-1	Battery Charger Installed in Transit Case	3
2-1	Front Panel Controls and Displays	5
2-2	Rear Panel Controls	7
2-3	Battery Charger Configuration	9
2-4	Chassis Assembly	15
2-5	Battery Holder Assembly	21
2-6	Printed Wiring Board Basket Assembly	23
2-7	Cover Assembly	27
2-8	Battery Charger Overall Schematic	29
2-9	Battery Charger Electrical Block Diagram	31

LIST OF TABLES

Table		Page
2-1	Meter Circuit Resistor Values	47
2-2	Meter Circuit Calculations, 50 MA Scale	48
2-3	Meter Circuit Calculations, 200 MA Scale	49
2-4	Meter Circuit Calculations, 700 MA Control, 1000 MA Scale	50
3-1	Specification Tolerances and Test Limits, Charging Current	60
3-2	Environmental Tests	62

SECTION 1

INTRODUCTION

1.1 SCOPE OF REPORT

This document summarizes the technical content of the program to design, develop, fabricate and test engineering development models of Battery Charger PP-7286( )/U. The Battery Charger was developed under USAECOM contract DAAB-07-74-C-0270, Modification P00023, to support the AN/GVS-5, which is powered by a rechargeable nickel cadmium battery, type BB-516( )/U, and other Army equipment using generically similar batteries. The technical characteristics are described in ECOM Development Specification Number EL-CP2128-0001A.

1.2 SUMMARY DESCRIPTION OF EQUIPMENT

The hardware developed consisted of the Battery Charger unit PP-7286( )/U and its transit case, CY-7670( )/U.

1.2.1 Battery Charger

The battery charger operates from prime power of 115 or 230 V (±10%) 47 to 63 Hz ac, single phase. It provides five independently adjustable charging circuits, each capable of being set to charge at constant current rates from 15 through 700 milliamperes inclusive. A multiple scale meter can be switched to measure current in each of the five channels. The circuits provide constant current into any load from zero volts (short circuit) to 36 volts. A digital timer common to all circuits can be set in tenths of an hour increments from 0.1 to 19.9 hours. Time remaining in the charging cycle is displayed by an incandescent, seven segment, 3 digit display. An internal primary battery provides nonvolatile memory for the charger in the event of power interruption. A sixth position on the meter switch allows the voltage of this battery to be measured. Five battery holders for BB-516 or smaller batteries are provided on the battery charger front panel. Each channel output also appears at a pair of binding posts on the panel to permit connection to external batteries. All charging channels are fused to protect against battery reversal or other overload conditions.

The battery charger is slightly less than one cubic foot in volume; it weighs about 35 lbs., is louvered for natural convection cooling, and fits into a transit case which is provided for transportation and storage.

1.2.2 Transit Case

The transit case protects the battery charger against vibration, shock and immersion which may be encountered during transportation, handling and storage. Its outer shell is molded fiberglass on which is installed the necessary hardware–latches, gaskets, humidity indicator and pressure relief valve. An internal foam cushion supports the battery charger. Figure 1-1 shows the battery charger installed in its transit case.

1.3 RELATED DOCUMENTS

1.3.1 Design Plan

The planned design of the battery charger was described and analytically substantiated in the Design Plan, Contract Document *H001 (P/O CLIN 0013)*: "AN/GVS-5( ) Preliminary Design and Visualization Data Design Plan, Volume V, Battery Charger".

1.3.2 Development Specification

The technical requirements were detailed in "Electronics Command Development Specification EL-CP2128-0001A, 21 May 1975, Charger, Battery PP-7286( )/U". A modification to this specification to more accurately represent the hardware is in process.

1.3.3 Manufacturing Drawings and Specifications

The Battery Charger is defined by a drawing set under drawing CL-SM-B-889033 Set Assembly, Battery Charger. A Ci specification has been prepared and is being coordinated at ECOM.

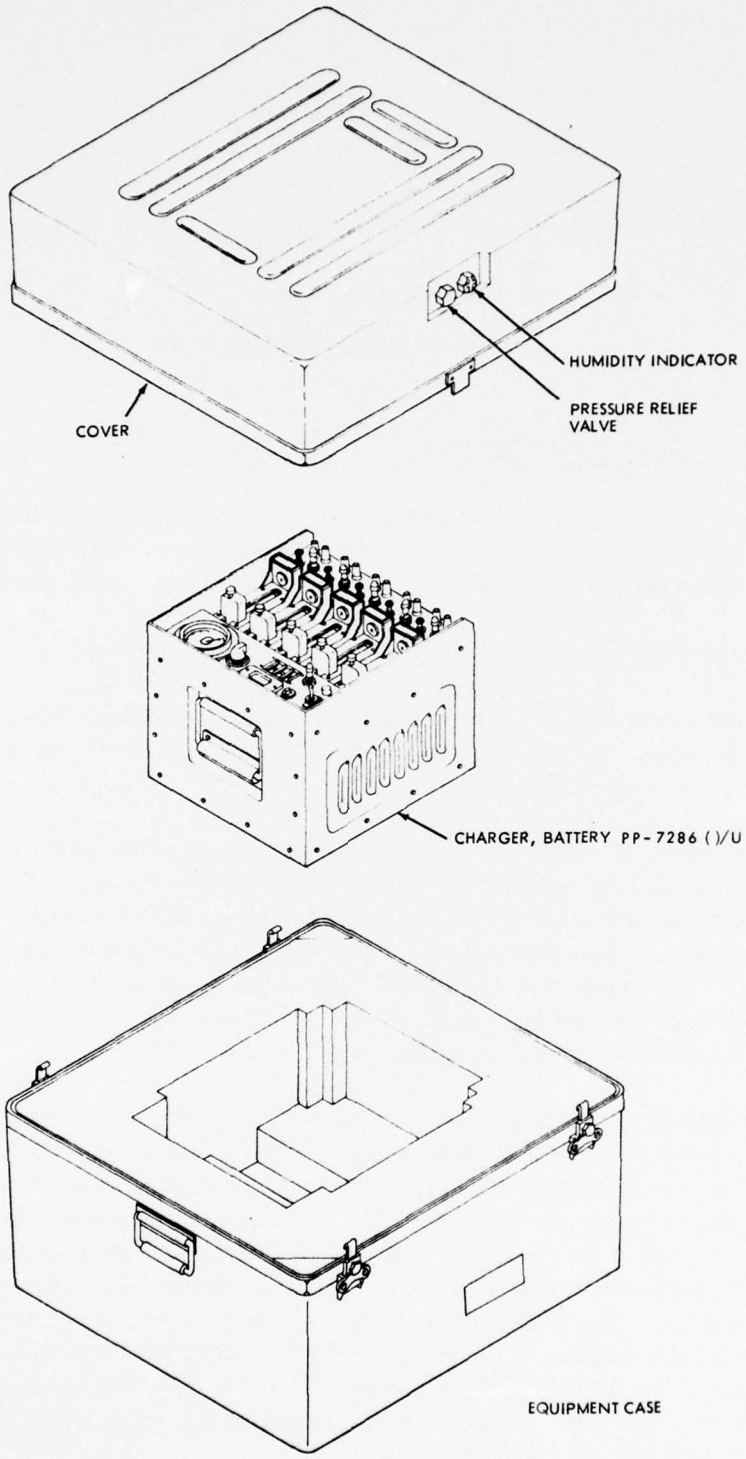

Figure 1-1. Battery Charger Installed in Transit Case

SECTION 2

DESIGN IMPLEMENTATION

2.1 OPERATIONAL FEATURES

The Battery Charger packaging and the layout, positioning and grouping of controls and displays conform generally to the configuration suggested in the development specification. Figure 2-1 shows the front panel configuration.

2.1.1 Front Panel Controls and Displays

The functions common to all charging channels are grouped in the upper third of the front panel. At the left are the main power circuit breaker toggle switch and green power on pilot light.

The timing controls and displays comprise the time remaining display, battery charging time setting switches and the start time pushbutton. The display consists of three seven-segment incandescent numerical indicators, with decimal point engraved on the covering window. It displays hours and tenths of hours up to 19.9. Left hand digits are blanked when not required. The time setting switches are the thumbwheel type. The start time switch is a momentary pushbutton which actuates a latching relay.

The direct metering circuit controls are the six position rotary selector switch and the memory battery test momentary switch. The rotary switch connects the meter to any of the five individual charging channels to allow monitoring or setting of the channel current. In the sixth position it connects the meter to the memory battery test circuit. In this position, actuation of the memory battery test switch displays the battery voltage, under test load conditions, on the panel meter. The panel meter is a long scale (250°) 2 1/2 inch instrument with three scale ranges, 0-50 mA, 0-200 mA and 0-1000 mA full scale, although the 0-1000 scale is only numbered to 700 mA, the maximum specified charging current. The scale to be used is selected by the charging current multiplier for each channel (see below).

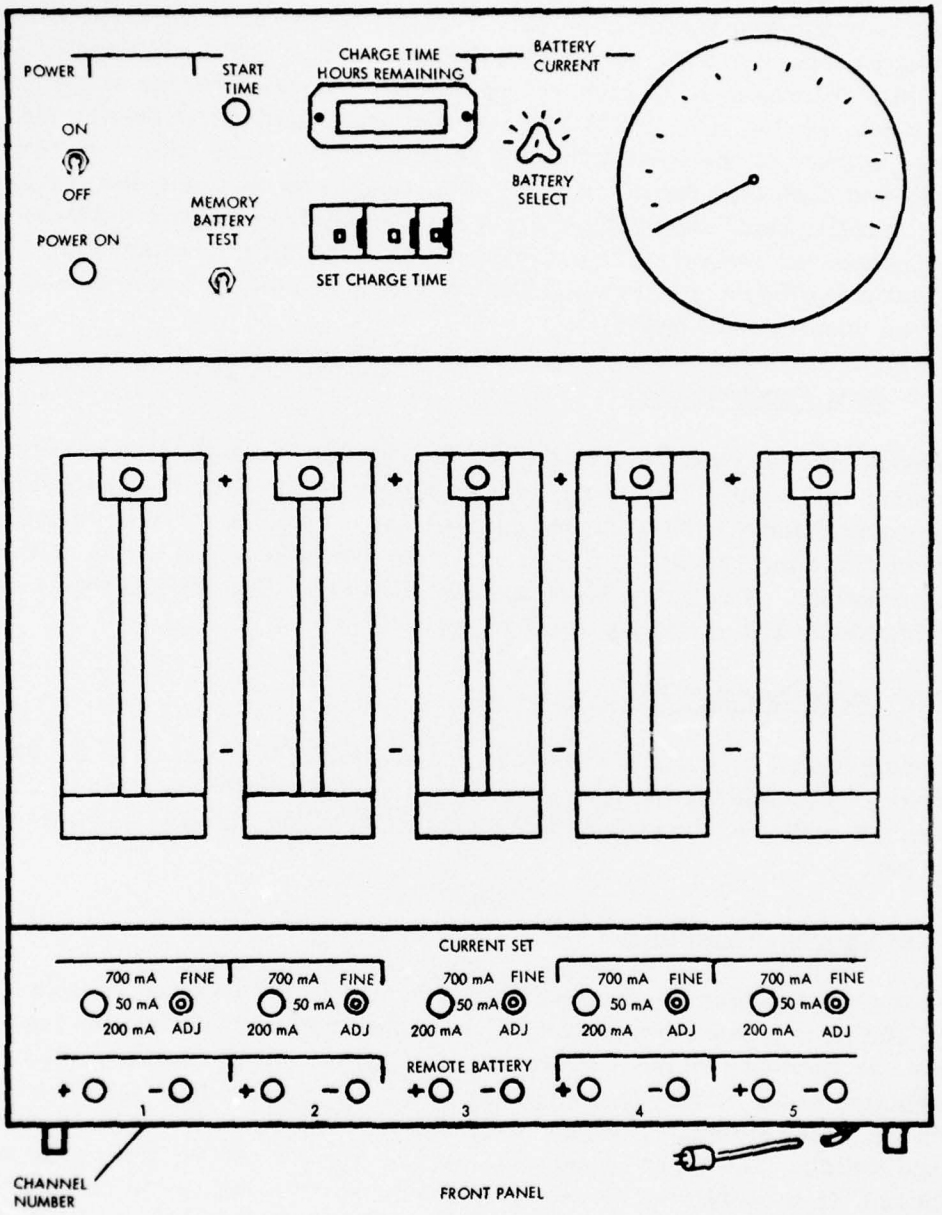

Figure 2-1. Front Panel Controls and Displays

The functions unique to the individual charging channels are in five identical columns in the lower two thirds of the panel. The upper section carries the battery holder, with top contact adjustable for batteries or cells between one fourth inch and four inches in height. Directly below the lower battery holder (negative) contact are the current adjustment controls for that channel. These consist of a three position locking toggle switch for selecting the current range, 15-50 mA, 50-200 mA, or 200-700 mA, and associated potentiometer for setting current at any point within the selected range. The potentiometers are the slotted shaft type for screwdriver adjustment with slotted collet and lock nut. Directly below the controls are a positive (red) and negative (black) binding post for connection to batteries which do not fit the battery holders. The battery holders and binding posts are diode isolated for protection against parallel connection of batteries.

2.1.2 Rear Panel Controls

Recessed into the back panel of the battery charger are eight fuse holders and a locking two-position toggle switch (See Figure 2-2). Five 1-ampere fuses are provided for the five charging channel output circuits. The sixth one ampere fuse protects the 10 volt logic elements from overvoltage and the 10 volt supply from overload. Two spare fuses are also provided. The locking toggle switch selects either 115 or 230 volt input power.

2.1.3 Other Operator Features

A spring loaded carrying handle is recessed into the top surface of the battery charger. Between the parallel skids on the charger bottom surface is a bracket to permit coiling of the power input cable which is permanently connected to the charger.

2.1.4 Current Adjustment

The Battery Charger is designed to provide essentially constant current into any load from a short circuit to full compliance voltage. Initial current adjustment can therefore be made by short circuiting the output binding posts prior to connection of the battery to the binding posts. The desired channel is selected with the meter selector switch, and the appropriate range is set by the channel range switch. The timer is set to 0.1 hr. or greater and the start time switch actuated, thus energizing the charging channels. The current adjustment potentiometer is adjusted to the desired current reading, using the meter scale corresponding to the selected current range. The short circuit is then removed and the battery connected.

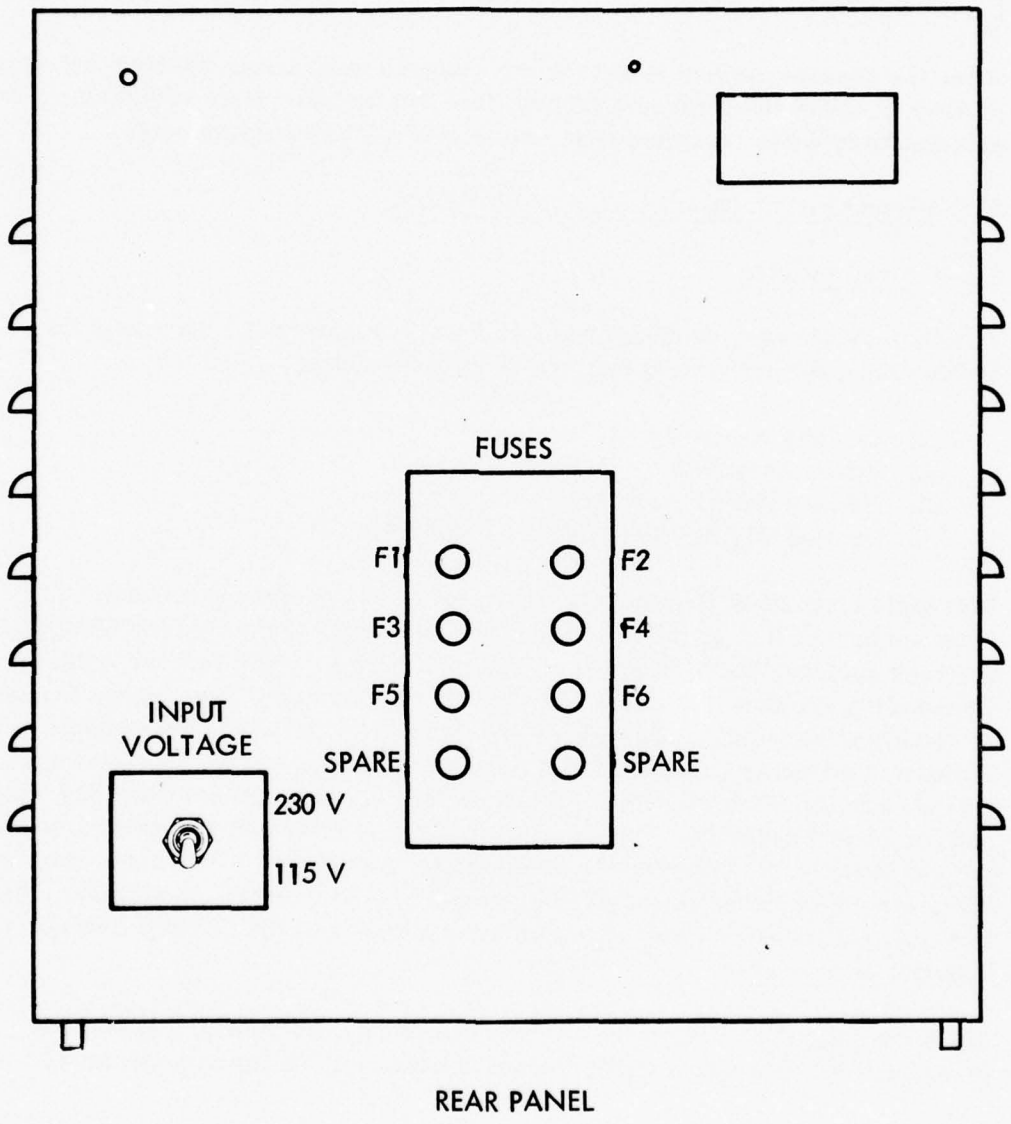

Figure 2-2. Rear Panel Controls

If a battery is installed in a battery holder the corresponding binding posts may be short circuited for adjustment without removing the battery. The short must be removed for charging however.

2.1.5 Timing

After the desired current is set for all channels to be used, the time set switch is used to select the desired charging time and the start time switch is again actuated to input the selected time and to initiate the charging cycle.

2.2 MECHANICAL DESIGN AND PACKAGING

2.2.1 Configuration

The Battery Charger configuration is shown in Figure 2-3. Basically the Battery Charger comprises four major subassemblies:

(1) Chassis Assembly
(2) Cover Assembly
(3) Battery Holder Assembly
(4) Printed Wiring Board Basket Assembly

The basic element of the Chassis Assembly is a one-piece structure. The front surface of this structure forms the front panel of the Battery Charger; the rear surface, the back panel of Battery Charger. The Battery Holder Assemblies are mounted to the front panel, the Printed Wiring Board Basket Assembly is mounted to one side of the structure. All other components of the Battery Charger are mounted to the structure. Some of the more major components are the filter capacitor, the transformer, the resistor heat sink assembly, and the filter assembly. The Cover Assembly is attached, by screws, to the top and sides of the structure to complete the assembly. Obviously, accessibility for maintenance is provided by removal of the cover. In addition, there is a safety interlock switch which interrupts power to the Battery Charger upon removal of the cover.

Skids are provided at the bottom of the structure. Between the skids are provided a storage space and a storage bracket for the input power cable.

THIS DOCUMENT HAS BEEN PURCHASED BY THE GOVERNMENT AND MAY BE REPRODUCED AND USED IN CONNECTION WITH ANY GOVERNMENT PROCUREMENT OR MAINTENANCE OPERATION

NOTE
DATA MARKED WITH AN ASTERISK (*) IS PROPRIETARY TO A PRIME MANUFACTURER. IT DOES NOT TAKE PRECEDENCE OVER ANY OTHER DATA IN THIS DRAWING, AND IS NOT CONTRACTUALLY BINDING ON EITHER THE CONTRACTOR OR THE GOVERNMENT

NOTES:
1. WORKMANSHIP SHALL BE IN ACCORDANCE WITH MIL-STD-454, REQT 9.
2. FOR ELECTRICAL SCHEMATIC SEE SM-D-889111.
3. ELECTRICAL SOLDER CONNECTIONS SHALL BE IN ACCORDANCE WITH MIL-STD-454, REQT 5, USING FIND NO. 118.
4. PARTIAL REFERENCE DESIGNATIONS ARE SHOWN; FOR COMPLETE DESIGNATION PREFIX WITH UNIT NO. OR SUBASSEMBLY DESIGNATION (S).
5. VENDOR ITEM, SEE SPECIFICATION OR SOURCE CONTROL DRAWING.
6. DELETED
7. BOND R1 THRU R4, R10 & R11 IN PLACE AS SHOWN USING FIND NO. 116
8. APPLY .04 - .08 INCH OF FIND NO. 117 OVER ALL EXPOSED CONNECTIONS OF G1, S1, S6, T1-1 THRU T1-5, CB1 & A14CR1 (+).
9. APPLY FIND NO. 82 TO WIRES CONNECTING TO PINS 21 & 23 OF XA6 THRU XA10, PIN 4 OF XA11, PINS 1 & 2 OF A14R11 THRU A14R15, A14CR1 (+) AND C1 (+).
10. APPLY FIND NO. 81 TO WIRES CONNECTING TO S1, CB1, DS1, FL1, FL2, S6 & T1-1 THRU T1-5
11. TEST IN ACCORDANCE WITH SM-A-889136.
12. FOR WIRE CONNECTION LIST SEE WCL SM-A-883114.
13. APPLY FIND NO. 125 OVER SOLDER CONNECTIONS OF PINS 21 & 23 OF XA6 THRU XA10, P.N. 4 OF XA11, PINS 1 & 2 OF A14R11 THRU A14R15, DS1, FL1 AND FL2.

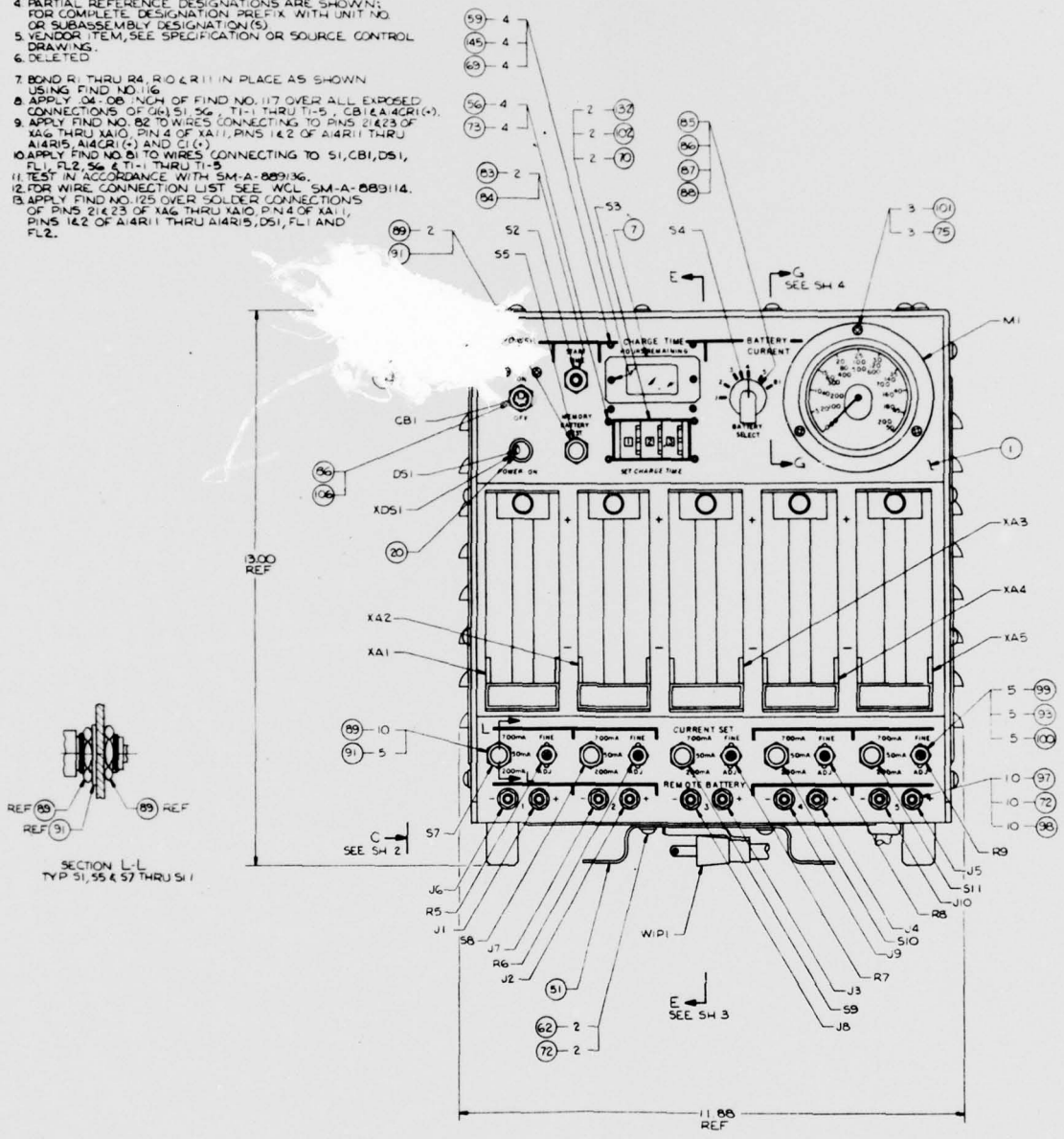

SECTION L-L
TYP S1, S5 & S7 THRU S11

REVISION STATUS				
SHEET	1	2	3	4
REVISION	C	C	C	

Figur

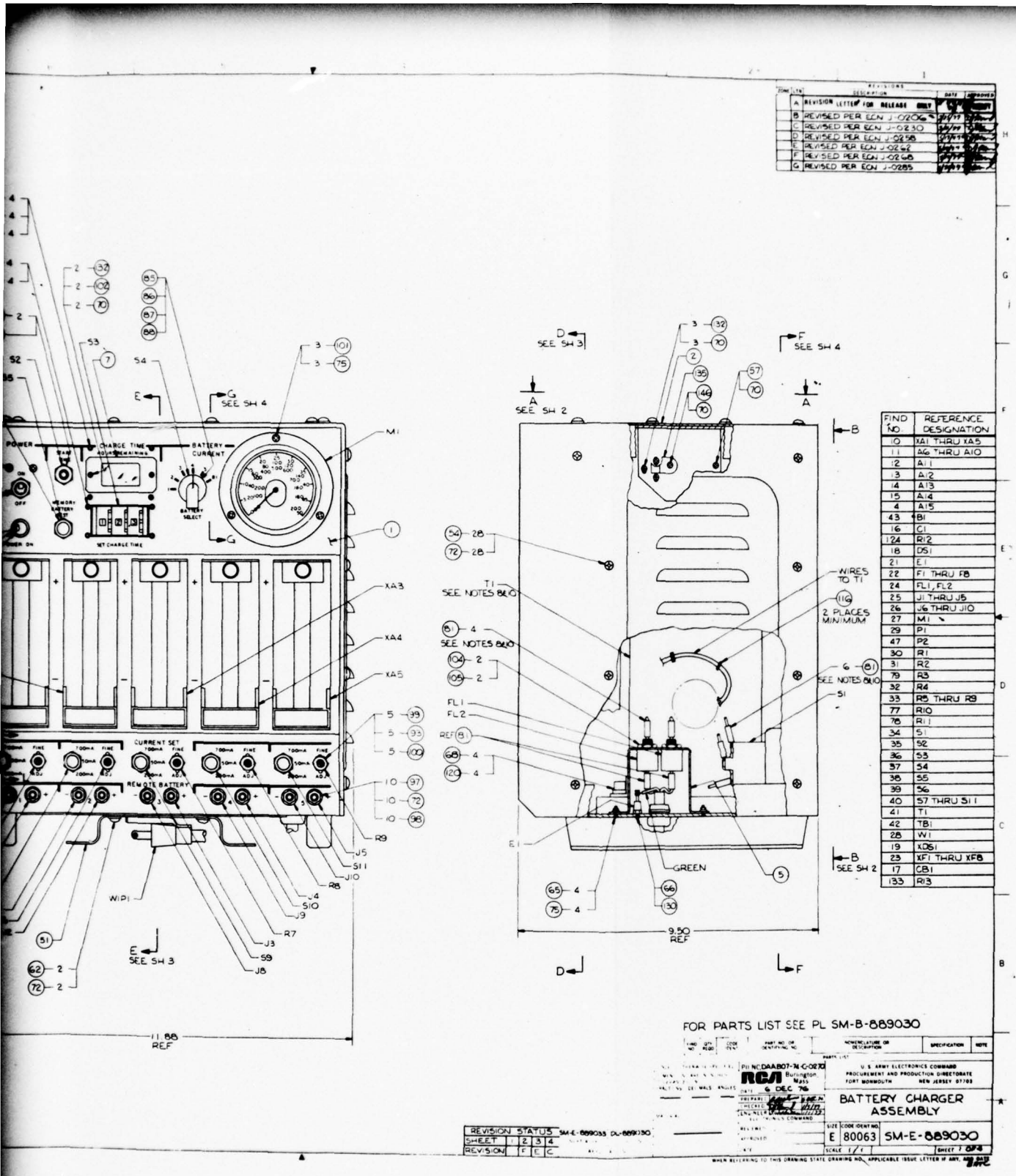

Figure 2-3. Battery Charger Configuration (Sheet 1 of 2)

2

THIS DOCUMENT HAS BEEN PURCHASED BY THE GOVERNMENT AND MAY BE REPRODUCED AND USED IN CONNECTION WITH ANY GOVERNMENT PROCUREMENT OR MAINTENANCE OPERATION

NOTE
DATA MARKED WITH AN ASTERISK (*) IS PECULIAR TO A PRIOR MANUFACTURER. IT DOES NOT TAKE PRECEDENCE OVER ANY OTHER DATA ON THIS DRAWING, AND IS NOT CONTRACTUALLY BINDING ON EITHER THE CONTRACTOR OR THE GOVERNMENT.

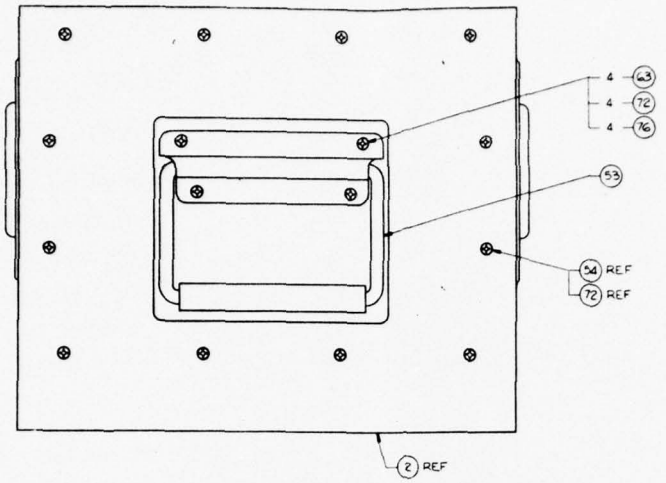

VIEW A-A
SEE SH 1
ROTATED 90° CCW

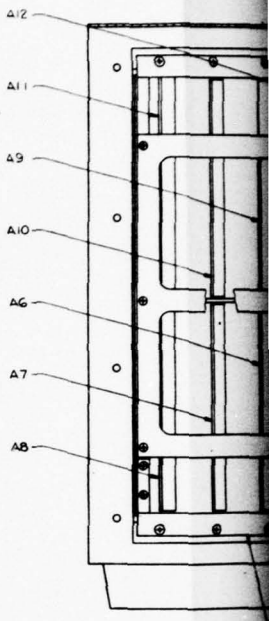

VIEW C
SEE SH

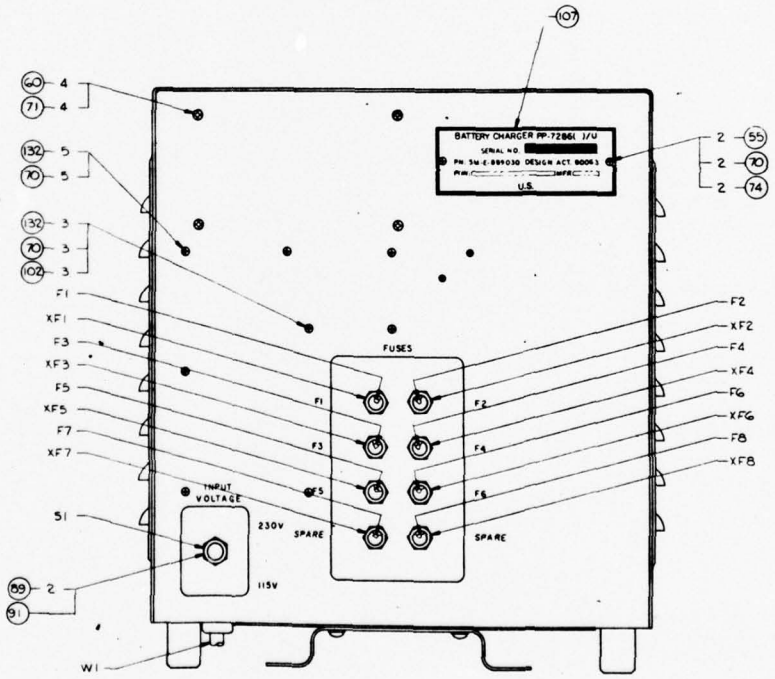

VIEW B-B
SEE SH 1

SM-D-889035	DL-889080
NEXT ASSY	USED ON
APPLICATION	

Figur

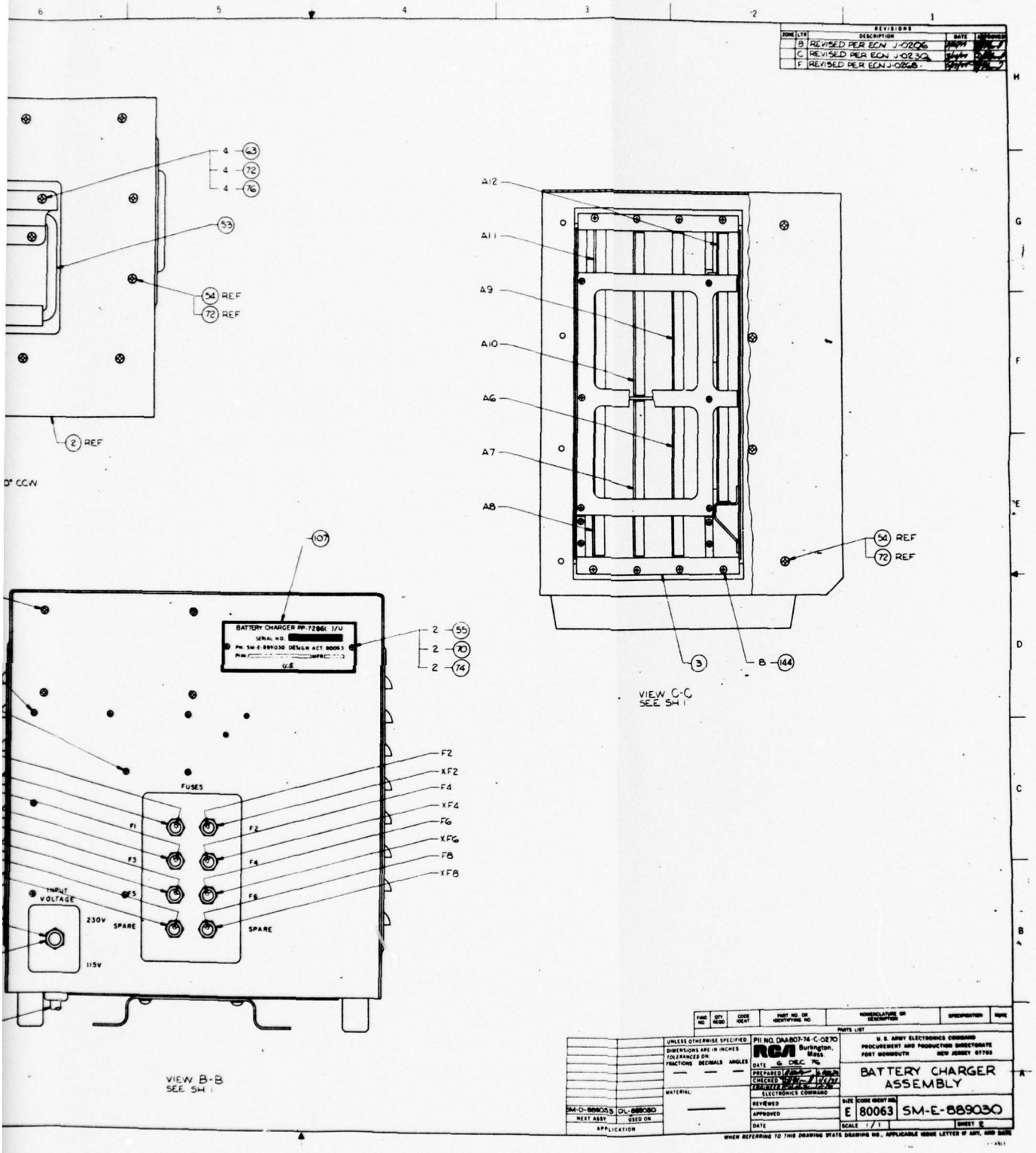

Figure 2-3. Battery Charger Configuration (Sheet 2 of 2)

2.2.2 Chassis Assembly

The basic chassis, shown in Figure 2-4, is a brazed, one-piece, frame structure whose front and back plates become the front and back panels of the Battery Charger. The structure is fabricated from 6061 aluminum alloy, predominantly 0.090 inches thick. Exceptions are the transformer mounting beams which are 0.125 inches thick, and the perforated plate at the bottom which is 5052 aluminum alloy 0.04 inches thick.

The chassis sides and top are open, as shown, in order to facilitate assembly, maintenance, and repair of the battery charger. The chassis base is closed by a perforated metal plate which has approximately 40% open area. The perforated plate promotes free convection cooling of the electronics. An iridite finish is used for corrosion protection and to provide an electrically conductive interface to the cover. Floating nut-plates are riveted to the structure and become the fastening mechanism for the cover.

2.2.2.1 Front Panel

The layout of the front panel is shown in Figure 2-3 (sheet 1). Human engineering specification requirements were of prime importance in the front panel design. Each of the five (5) battery charging channels is separated as a distinct channel laid out in a vertical column. Directly beneath each battery holder are the coarse and fine current range and adjustment controls for that channel as well as the binding posts used for external charging. The front panel is recessed to protect the battery holders. Other front panel components include:

(1) Power-On Indicator Light
(2) Five Adjustable Battery Holders
(3) Circuit Breaker - Power Switch
(4) Current Meter
(5) Five Current Range Set Switches
(6) Five Current Adjust Pots
(7) Set-Time Switch
(8) Start Charging/Time Pushbutton Switch
(9) Battery Channel Select Switch
(10) Five Sets of Banana Jack Type Binding Posts
(11) Memory Battery Test Switch
(12) Digital Display - Remaining Charge Time

The front panel is silk screened to identify the function and polarity of all of the components mounted on the panel. Current-carrying contacts on the front panel (battery holder assemblies) have been insulated for operator protection.

2.2.2.2 Rear Panel

The rear panel layout is shown in Figure 2-3 (sheet 2). This panel has two recessed wells: one contains the fuseholders; and the second, contains the 115/230 volt input voltage selector switch. Mounted to the inside surface of the rear panel is a resistor mounting plate assembly, the capacitor discharge resistor, and the power supply filter capacitor.

2.2.3 Battery Holder Assembly

The battery holder assembly is shown in Figure 2-5. The holder is designed to retain and make connection to the BB-516( )/U sealed nickel cadmium battery used in the Laser Rangefinder MX-9838( )/GVS-5. The battery holder is adjustable from 0.25 inches to 4.00 inches to permit charging of other 6, 12, or 24 volt sealed nickel cadmium batteries. This adjustment is accomplished by loosening the knurled screw in the positive contact insulator assembly and positioning the contact on the battery holder. To protect the operator from the potential hazard of shock during operation, the battery holder assembly is electrically insulated with plastic used over all exterior surfaces. The label provided on each battery holder assembly to record start-charge time or other pertinent data can be erased to update the information.

The battery holder contacts are fabricated of brass and are nickel plated for wear and corrosion protection.

2.2.4 Printed Wiring Board Basket Assembly

The printed wiring board basket assembly is shown in Figure 2-6. This assembly is fabricated from 0.063 inch thick 5052 aluminum alloy. The printed wiring boards contained in the basket include:

(1) Five Charging Modules
(2) Power Supply Printed Wiring Board
(3) Timing Circuit Printed Wiring Board

The five charging modules and power supply board plug into 23-pin ELCO connectors. These connectors are keyed to prevent insertion of a board into the wrong slot. The timing electronics printed wiring board, larger in size than the other boards, has a 41-pin ELCO connector.

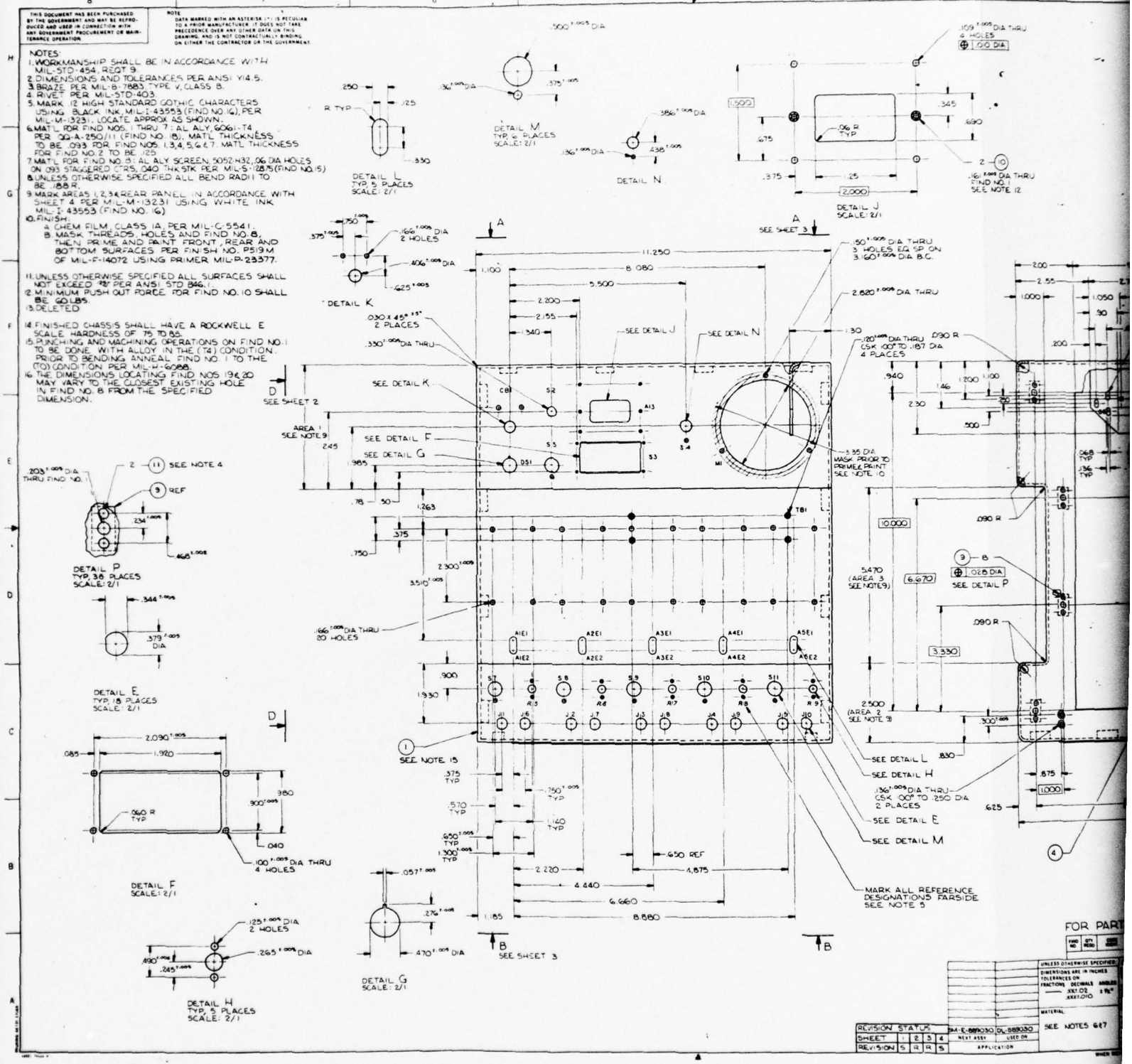
THIS DOCUMENT HAS BEEN PURCHASED BY THE GOVERNMENT AND MAY BE REPRODUCED AND USED IN CONNECTION WITH ANY GOVERNMENT PROCUREMENT OR MAINTENANCE OPERATION
NOTE: DATA MARKED WITH AN ASTERISK (*) IS PECULIAR TO A PRIOR MANUFACTURER; IT DOES NOT TAKE PRECEDENCE OVER ANY OTHER DATA ON THIS DRAWING, AND IS NOT CONTRACTUALLY BINDING ON EITHER THE CONTRACTOR OR THE GOVERNMENT
NOTES:
1. WORKMANSHIP SHALL BE IN ACCORDANCE WITH MIL-STD-454, REQT 9.
2. DIMENSIONS AND TOLERANCES PER ANSI Y14.5.
3. BRAZE PER MIL-B-7883, TYPE V, CLASS B.
4. RIVET PER MIL-STD-403.
5. MARK, 12 HIGH STANDARD GOTHIC CHARACTERS USING BLACK INK MIL-I-43553 (FIND NO. 16), PER MIL-M-13231. LOCATE APPROX AS SHOWN.
6. MATL FOR FIND NOS. 1 THRU 7: AL ALY, 6061-T4 PER QQ-A-250/11 (FIND NO. 18). MATL THICKNESS TO BE .093 FOR FIND NOS. 1,3,4,5,6 & 7. MATL THICKNESS FOR FIND NO. 2 TO BE .125.
7. MATL FOR FIND NO. 13: AL ALY SCREEN, 5052-H32, .06 DIA HOLES ON .093 STAGGERED CTRS, .040 THK STK PER MIL-S-12875 (FIND NO. 15)
8. UNLESS OTHERWISE SPECIFIED ALL BEND RADII TO BE .188 R.
9. MARK AREAS 1,2,3 & REAR PANEL IN ACCORDANCE WITH SHEET 4 PER MIL-M-13231 USING WHITE INK MIL-I-43553 (FIND NO. 16)
10. FINISH:
A. CHEM FILM, CLASS 1A, PER MIL-C-5541.
B. MASK THREADS, HOLES AND FIND NO. 8, THEN PRIME AND PAINT FRONT, REAR AND BOTTOM SURFACES PER FINISH NO. P519M OF MIL-F-14072 USING PRIMER MIL-P-23377.
11. UNLESS OTHERWISE SPECIFIED ALL SURFACES SHALL NOT EXCEED 63 PER ANSI STD B46.1.
12. MINIMUM PUSH OUT FORCE FOR FIND NO. 10 SHALL BE 60 LBS.
13. DELETED
14. FINISHED CHASSIS SHALL HAVE A ROCKWELL E SCALE HARDNESS OF 75 TO 85.
15. PUNCHING AND MACHINING OPERATIONS ON FIND NO. 1 TO BE DONE WITH ALLOY IN THE (T4) CONDITION. PRIOR TO BENDING ANNEAL FIND NO. 1 TO THE (TO) CONDITION PER MIL-H-6088.
16. THE DIMENSIONS LOCATING FIND NOS 19 & 20 MAY VARY TO THE CLOSEST EXISTING HOLE IN FIND NO. 8 FROM THE SPECIFIED DIMENSION.
DETAIL K
DETAIL M TYP 6 PLACES SCALE: 2/1
DETAIL L TYP 5 PLACES SCALE: 2/1
DETAIL N
DETAIL J SCALE: 2/1
DETAIL P TYP 38 PLACES SCALE: 2/1
DETAIL E TYP 18 PLACES SCALE: 2/1
DETAIL F SCALE: 2/1
DETAIL G SCALE: 2/1
DETAIL H TYP 5 PLACES SCALE: 2/1
SEE SHEET 2
SEE SHEET 3
AREA 1 SEE NOTE 9
AREA 2 SEE NOTE 9
AREA 3 SEE NOTE 9
MARK ALL REFERENCE DESIGNATIONS FARSIDE SEE NOTE 9
FOR PART
REVISION STATUS
SHEET 1 2 3 4
REVISION S R R S
UNLESS OTHERWISE SPECIFIED
DIMENSIONS ARE IN INCHES
TOLERANCES ON FRACTIONS DECIMALS ANGLES
MATERIAL
SEE NOTES 6&7

Figure 2-4

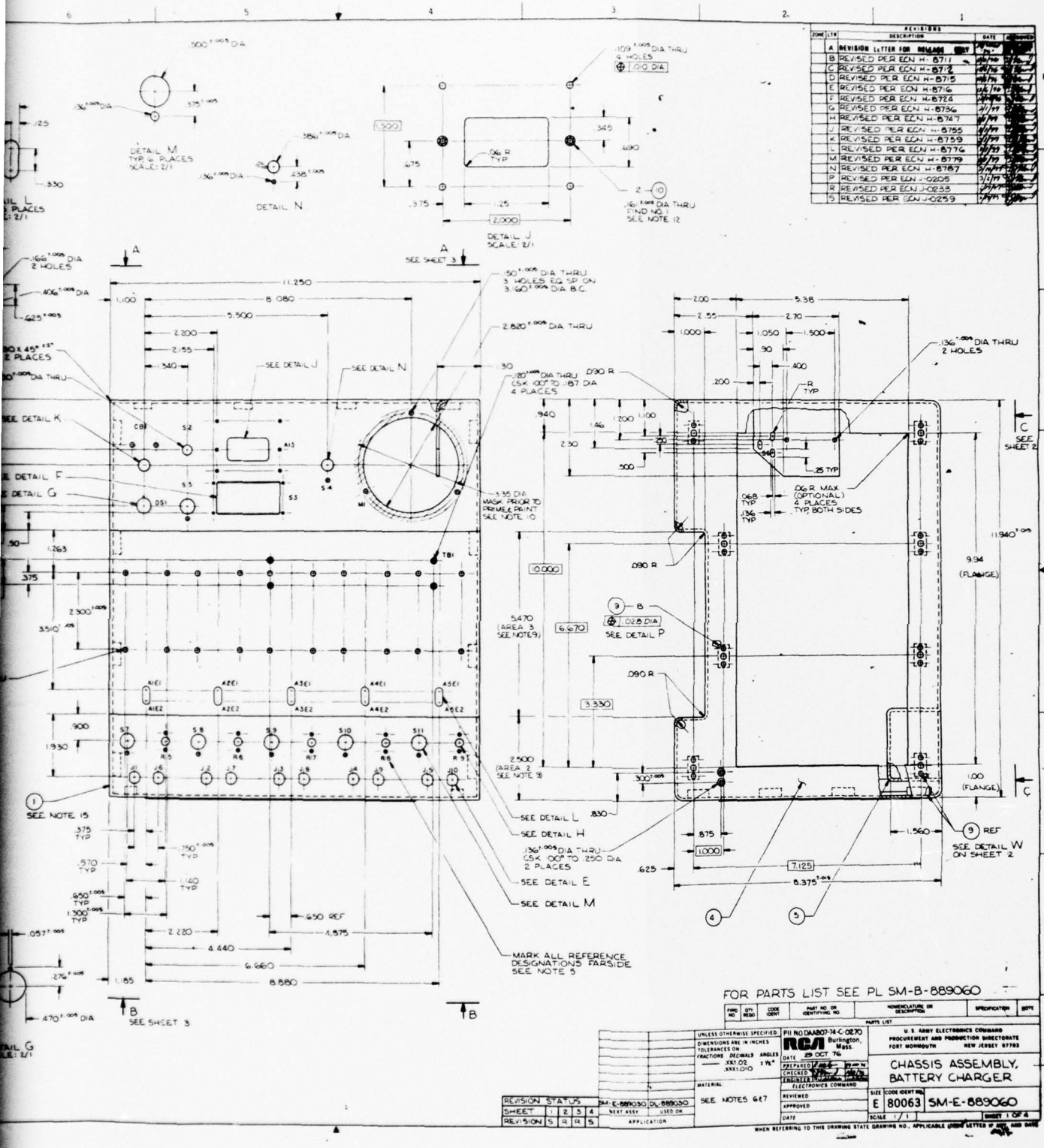

Figure 2-4. Chassis Assembly
(Sheet 1 of 3)

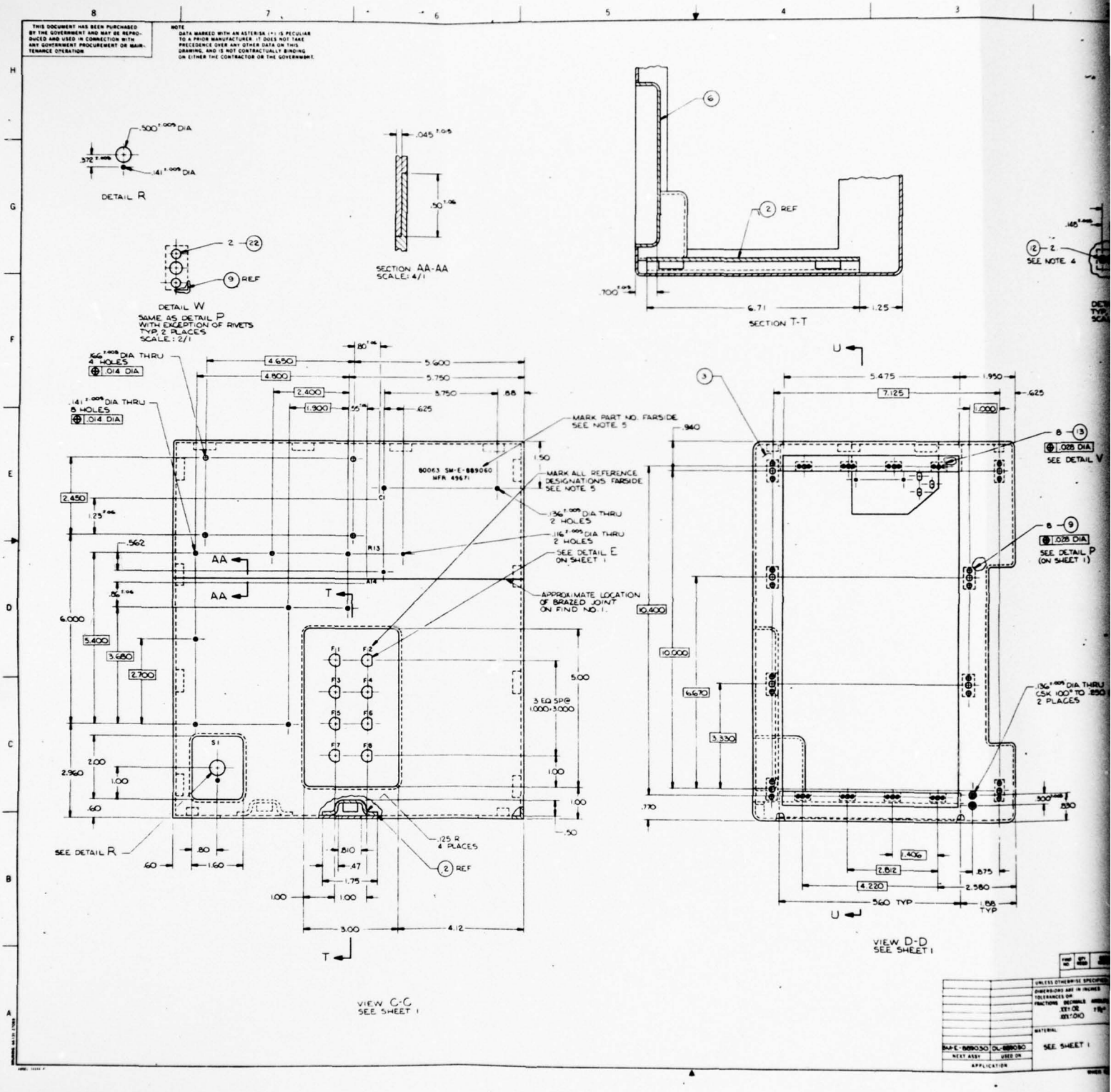
THIS DOCUMENT HAS BEEN PURCHASED BY THE GOVERNMENT AND MAY BE REPRODUCED AND USED IN CONNECTION WITH ANY GOVERNMENT PROCUREMENT OR MAINTENANCE OPERATION
NOTE
DATA MARKED WITH AN ASTERISK (*) IS PECULIAR TO A PRIOR MANUFACTURER. IT DOES NOT TAKE PRECEDENCE OVER ANY OTHER DATA ON THIS DRAWING, AND IS NOT CONTRACTUALLY BINDING ON EITHER THE CONTRACTOR OR THE GOVERNMENT.
DETAIL R
DETAIL W
SAME AS DETAIL P WITH EXCEPTION OF RIVETS TYP 2 PLACES
SCALE: 2/1
SECTION AA-AA
SCALE: 4/1
SECTION T-T
SEE NOTE 4
4 HOLES
.014 DIA
8 HOLES
MARK PART NO. FARSIDE SEE NOTE 5
MARK ALL REFERENCE DESIGNATIONS FARSIDE SEE NOTE 5
2 HOLES
SEE DETAIL E ON SHEET 1
APPROXIMATE LOCATION OF BRAZED JOINT ON FIND NO. 1.
3 EQ SP@ 1.000=3.000
.125 R 4 PLACES
SEE DETAIL R
VIEW C-C
SEE SHEET 1
CSK 100° TO .250
2 PLACES
SEE DETAIL V
SEE DETAIL P (ON SHEET 1)
VIEW D-D
SEE SHEET 1
SEE SHEET 1

Figure 2-

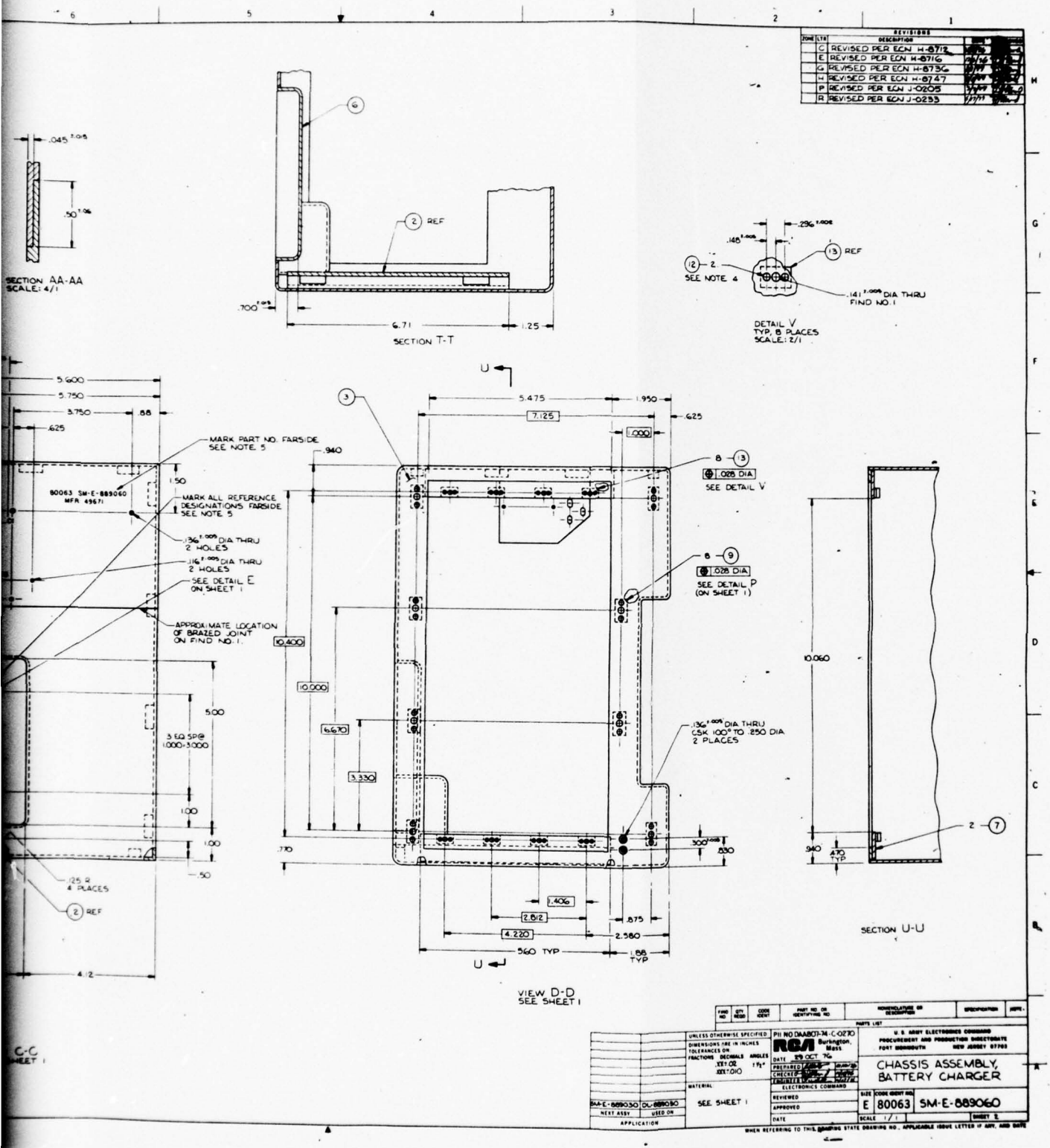

Figure 2-4. Chassis Assembly
(Sheet 2 of 3)

2

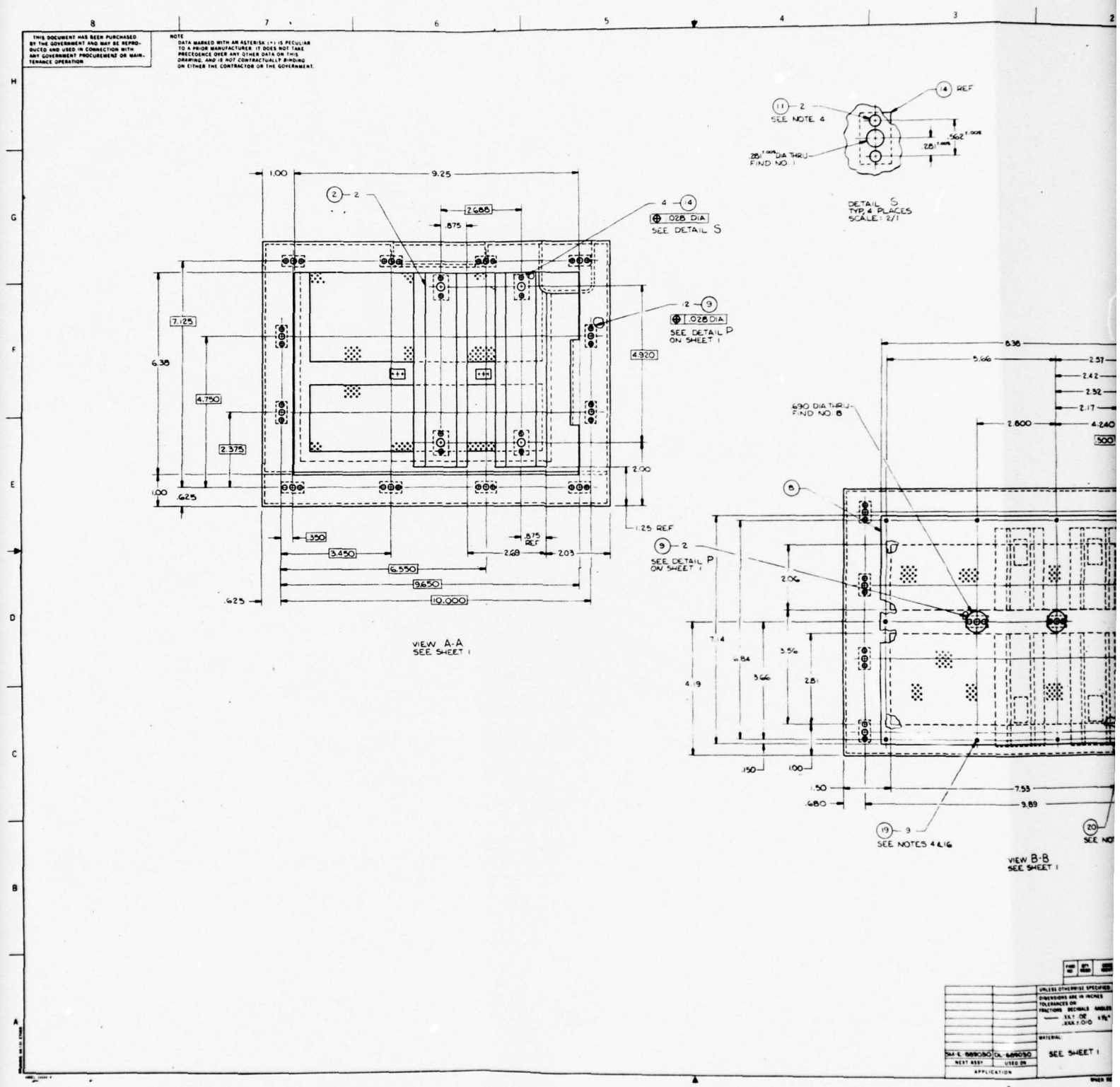
THIS DOCUMENT HAS BEEN PURCHASED BY THE GOVERNMENT AND MAY BE REPRODUCED AND USED IN CONNECTION WITH ANY GOVERNMENT PROCUREMENT OR MAINTENANCE OPERATION
NOTE
DATA MARKED WITH AN ASTERISK (*) IS PECULIAR TO A PRIOR MANUFACTURER. IT DOES NOT TAKE PRECEDENCE OVER ANY OTHER DATA ON THIS DRAWING, AND IS NOT CONTRACTUALLY BINDING ON EITHER THE CONTRACTOR OR THE GOVERNMENT.
SEE NOTE 4
DETAIL S
TYP. 4 PLACES
SCALE: 2/1
SEE DETAIL S
SEE DETAIL P ON SHEET 1
VIEW A-A
SEE SHEET 1
SEE DETAIL P ON SHEET 1
SEE NOTES 4 & 16
VIEW B-B
SEE SHEET 1
SEE SHEET 1

Figure 2-

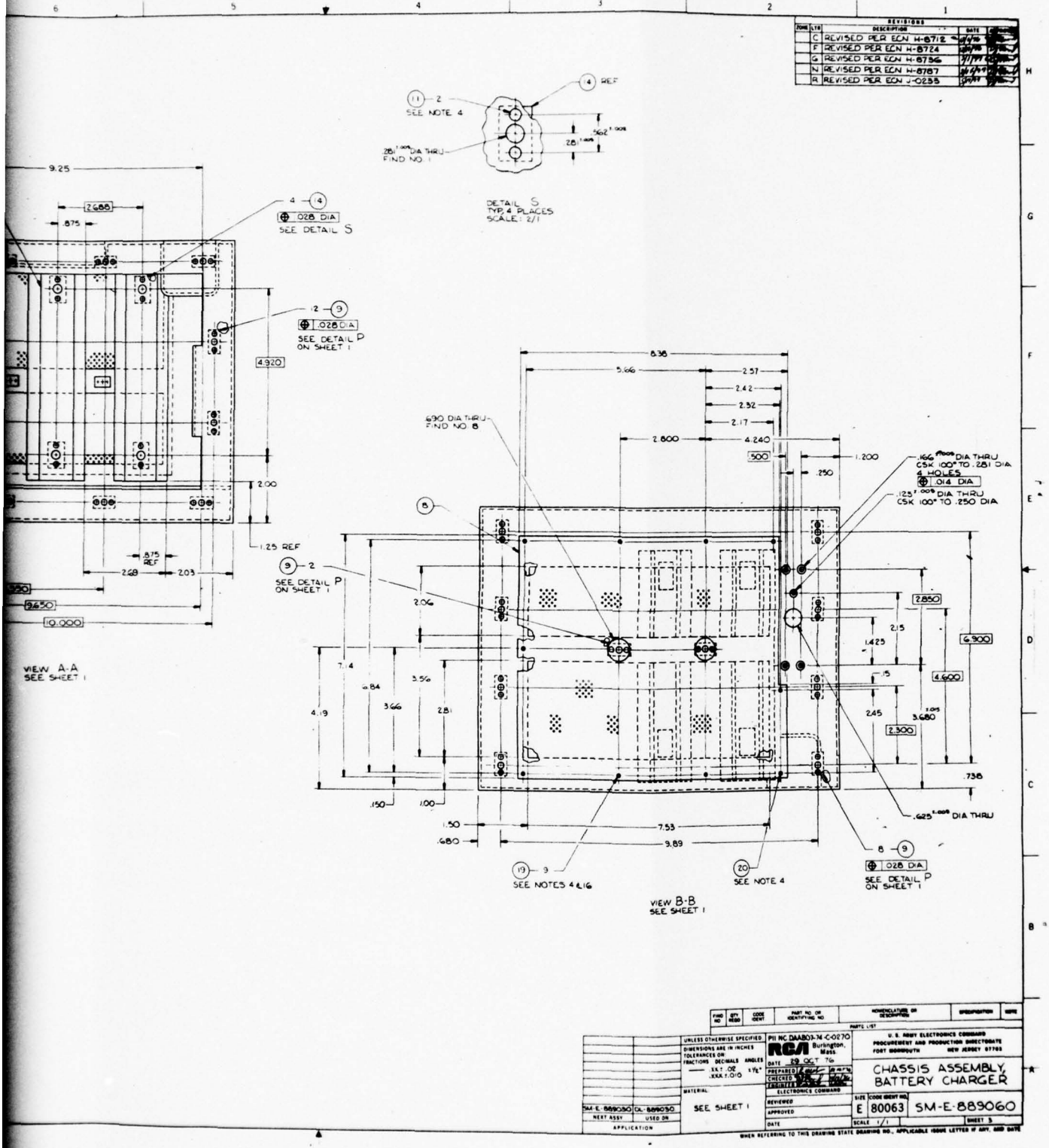

Figure 2-4. Chassis Assembly
(Sheet 3 of 3)

2

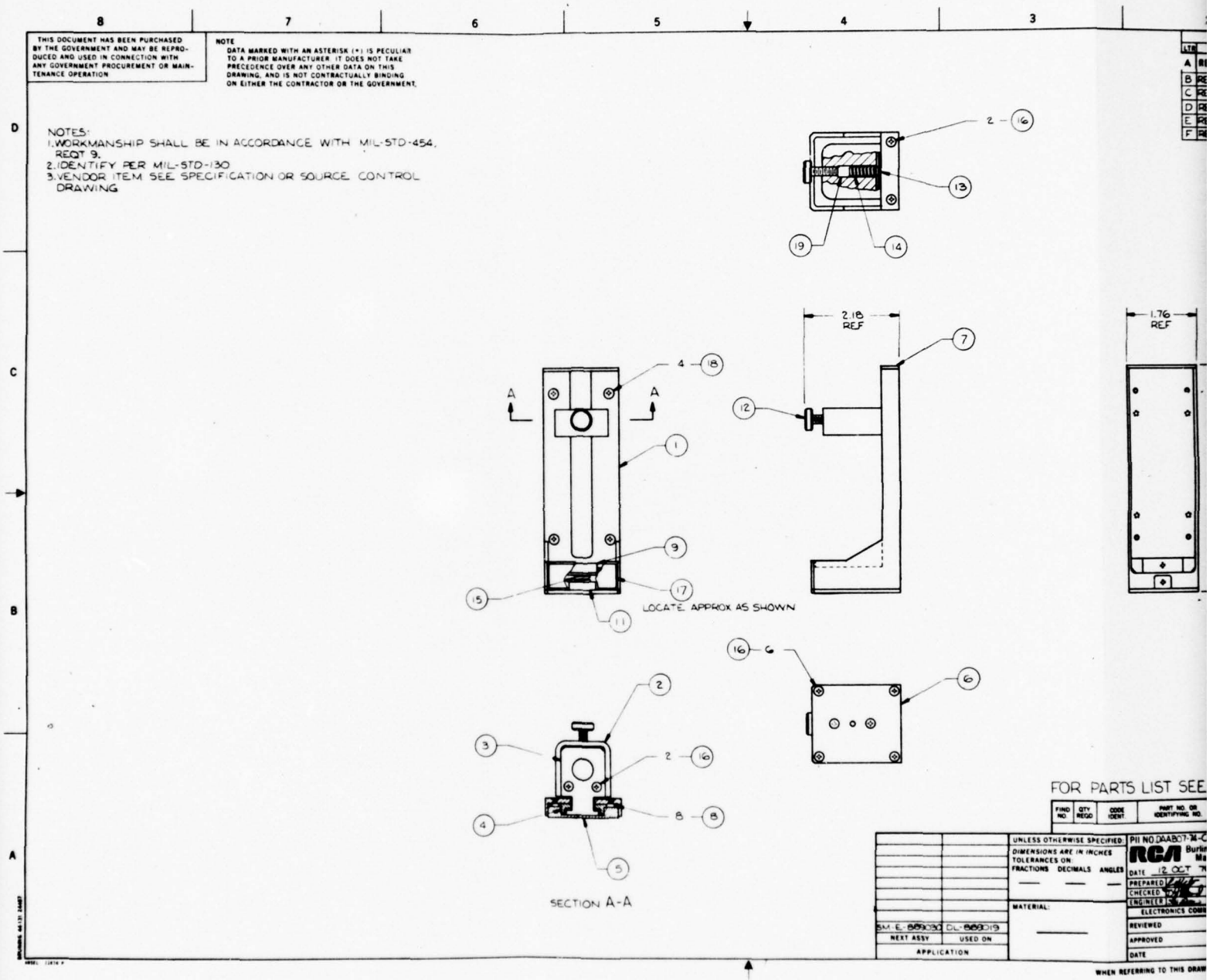
THIS DOCUMENT HAS BEEN PURCHASED BY THE GOVERNMENT AND MAY BE REPRODUCED AND USED IN CONNECTION WITH ANY GOVERNMENT PROCUREMENT OR MAINTENANCE OPERATION
NOTE
DATA MARKED WITH AN ASTERISK (*) IS PECULIAR TO A PRIOR MANUFACTURER. IT DOES NOT TAKE PRECEDENCE OVER ANY OTHER DATA ON THIS DRAWING, AND IS NOT CONTRACTUALLY BINDING ON EITHER THE CONTRACTOR OR THE GOVERNMENT.
NOTES:
1. WORKMANSHIP SHALL BE IN ACCORDANCE WITH MIL-STD-454, REQT 9.
2. IDENTIFY PER MIL-STD-130.
3. VENDOR ITEM SEE SPECIFICATION OR SOURCE CONTROL DRAWING
2.18 REF
1.76 REF
LOCATE APPROX AS SHOWN
SECTION A-A
FOR PARTS LIST SEE
UNLESS OTHERWISE SPECIFIED
DIMENSIONS ARE IN INCHES
TOLERANCES ON
FRACTIONS DECIMALS ANGLES
MATERIAL:
NEXT ASSY
USED ON
APPLICATION
RCA
DATE 12 OCT
PREPARED
CHECKED
ENGINEER
ELECTRONICS COMM
REVIEWED
APPROVED
DATE

Figure 2-5. B

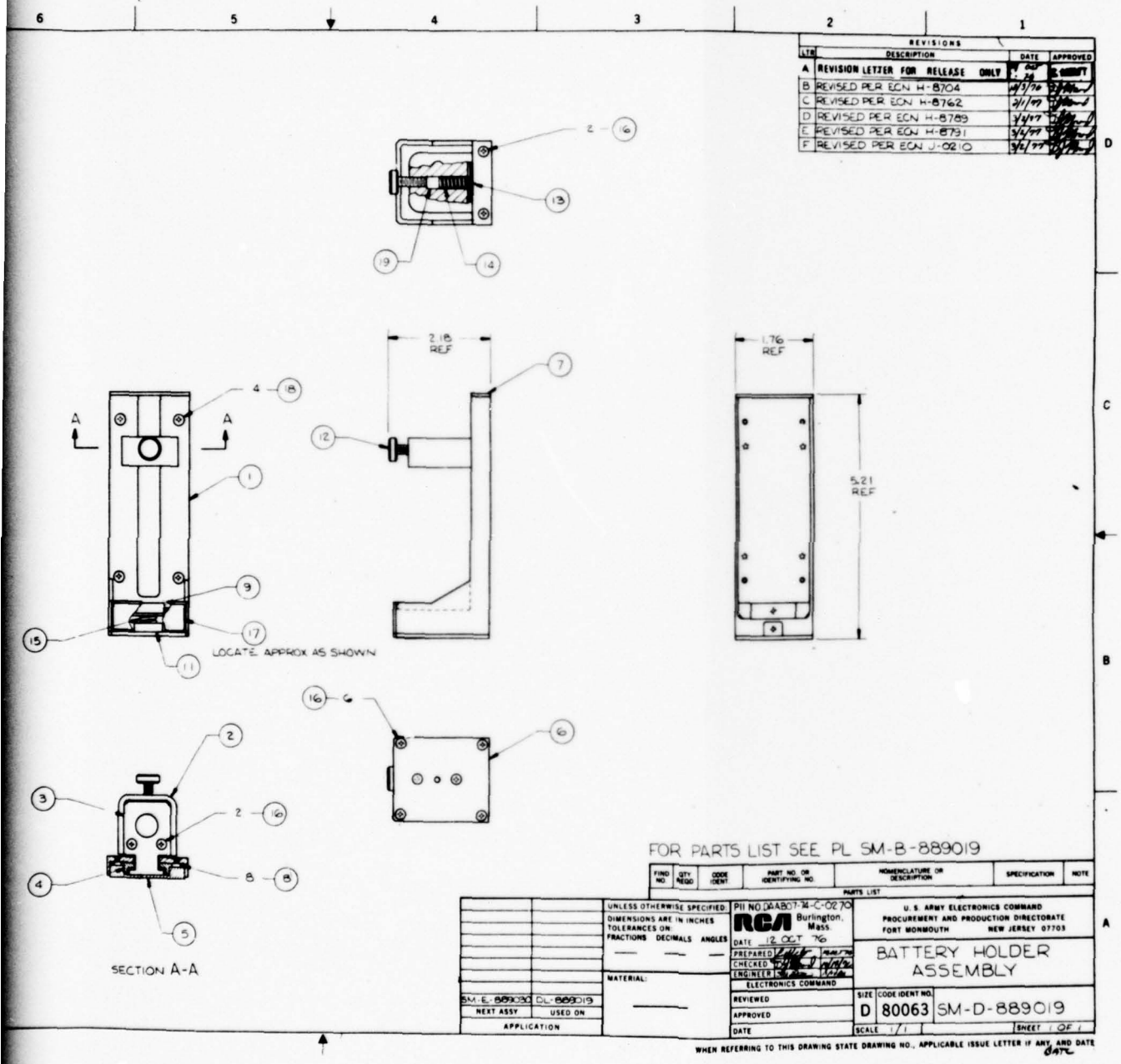

Figure 2-5. Battery Holder Assembly

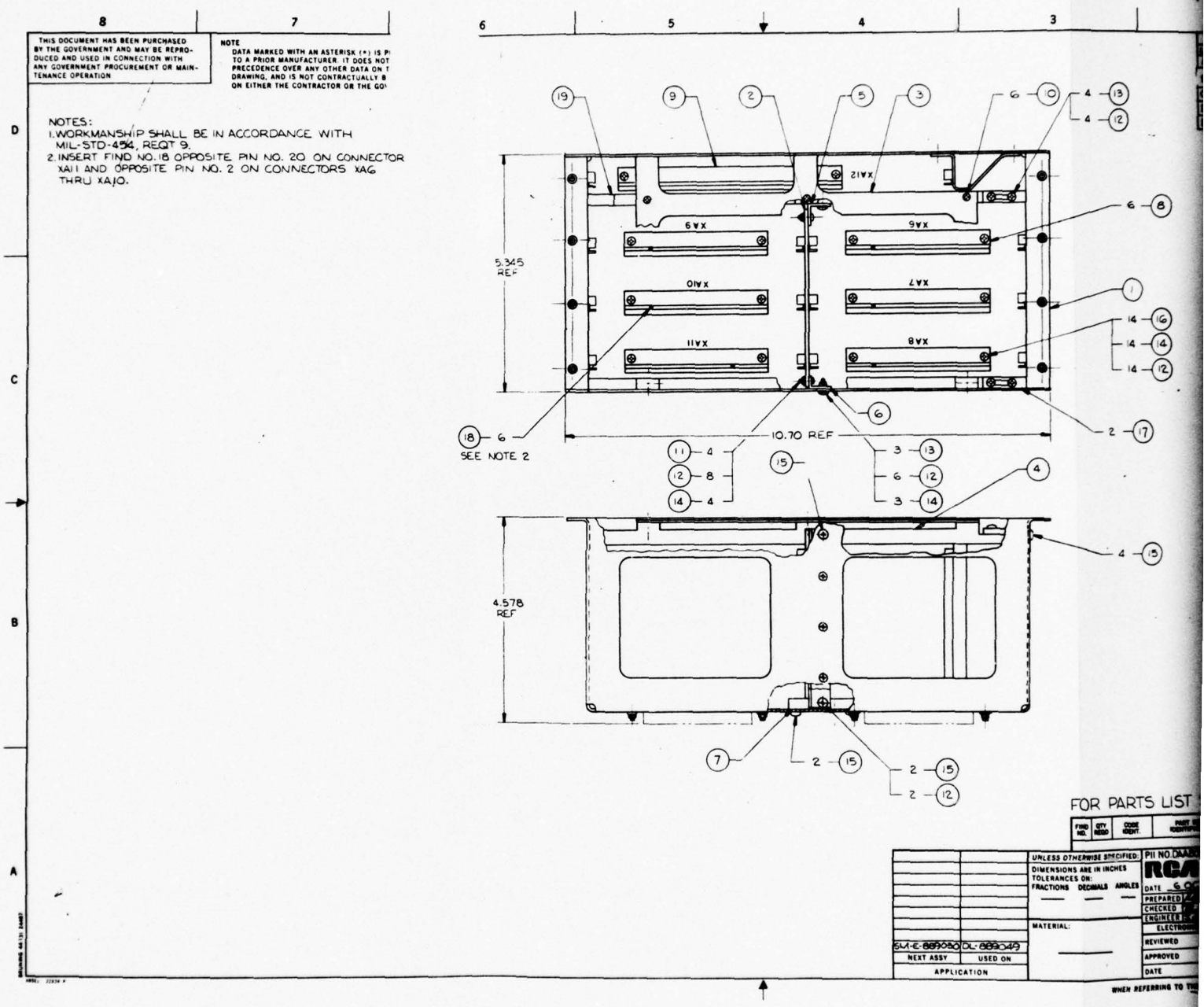
THIS DOCUMENT HAS BEEN PURCHASED BY THE GOVERNMENT AND MAY BE REPRODUCED AND USED IN CONNECTION WITH ANY GOVERNMENT PROCUREMENT OR MAINTENANCE OPERATION
NOTE
DATA MARKED WITH AN ASTERISK (*) IS P
TO A PRIOR MANUFACTURER. IT DOES NOT
PRECEDENCE OVER ANY OTHER DATA ON T
DRAWING, AND IS NOT CONTRACTUALLY B
ON EITHER THE CONTRACTOR OR THE GO
NOTES:
1. WORKMANSHIP SHALL BE IN ACCORDANCE WITH MIL-STD-454, REQT 9.
2. INSERT FIND NO. 18 OPPOSITE PIN NO. 20 ON CONNECTOR XA11 AND OPPOSITE PIN NO. 2 ON CONNECTORS XA6 THRU XA10.
5.345 REF
10.70 REF
4.578 REF
SEE NOTE 2
XA12
XA9
XA6
XA10
XA7
XA11
XA8
FOR PARTS LIST
FIND NO.
QTY REQD
CODE IDENT.
UNLESS OTHERWISE SPECIFIED:
DIMENSIONS ARE IN INCHES
TOLERANCES ON:
FRACTIONS DECIMALS ANGLES
MATERIAL:
SM-E-889030
DL-889049
NEXT ASSY
USED ON
APPLICATION
PII NO.
RCA
DATE
PREPARED
CHECKED
ENGINEER
ELECTRONICS
REVIEWED
APPROVED
DATE
WHEN REFERRING TO THIS

Figure 2-6.

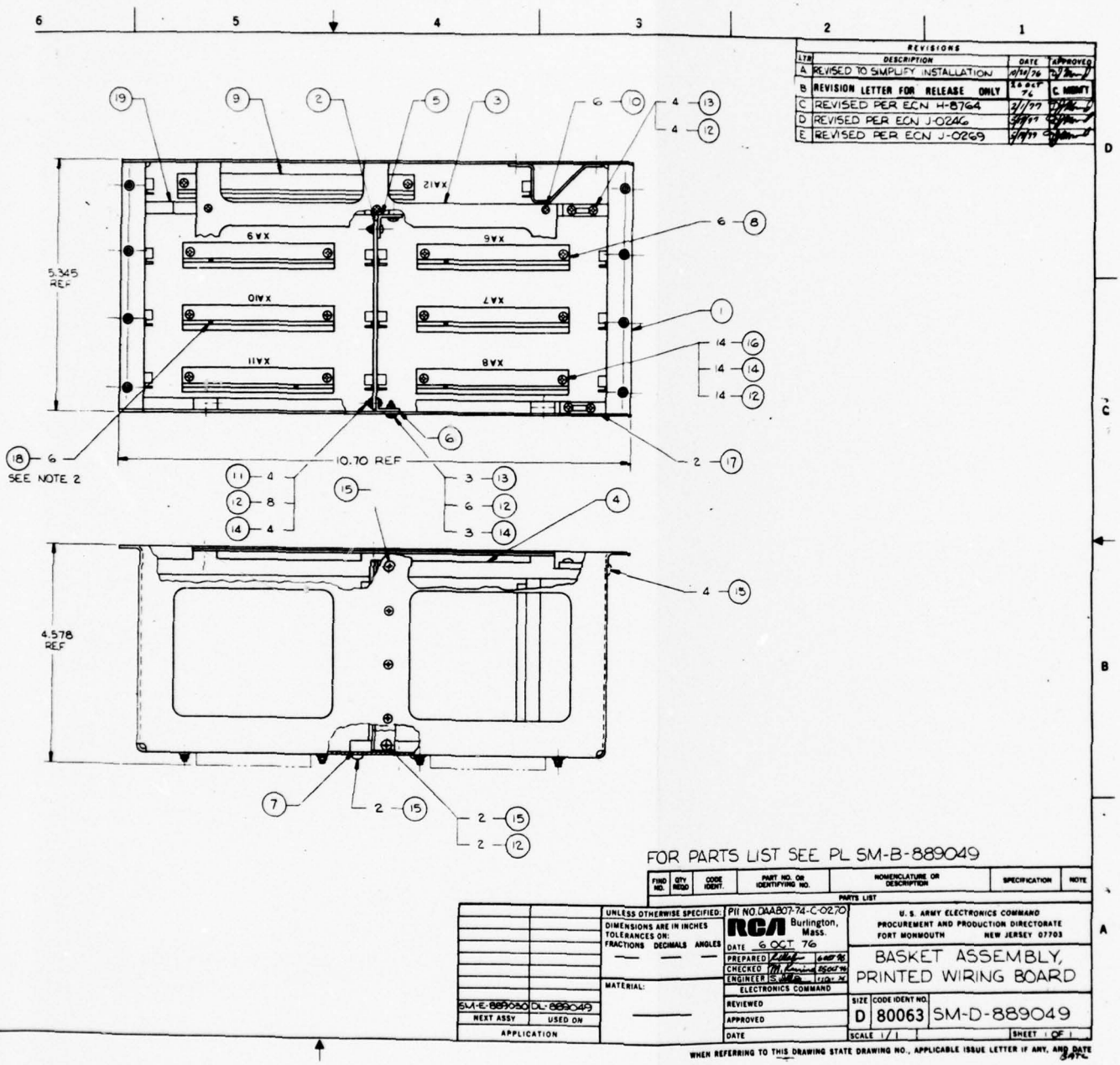

Figure 2-6. Printed Wiring Board Basket Assembly

The boards are held in place with a cover to prevent accidental board disengagement. The card basket is mounted to the side of the battery charger. See Figure 2-3 (sheet 2). Access to the boards is obtained by removing the battery charger cover assembly. This opens the power interlock switch to protect the operator from electrical shock. The card basket cover may then be removed permitting removal of the desired board.

2.2.5 Printed Wiring Board Design

The battery charger etched wiring boards are fabricated from single-sided copper G-10 glass epoxy. The timing board is 4 inches high and 8 inches long. The remaining boards are 4 inches high and 4.75 inches long. Aluminum L-shaped stiffeners are riveted to the top of the board for structural strength and to facilitate board removal. The larger board components are mechanically secured to the boards by wire, screws, or adhesive staking material as applicable. The boards are also conformally coated with a urethane material for moisture and salt fog protection.

2.2.6 Cover Assembly

The cover assembly is shown in Figure 2-7. It is U-shaped and, when assembled to the chassis, forms the outer sides and top of the Battery Charger. The cover assembly has louvred sides to promote natural convection, and has a recessed carrying handle at the top.

2.3 CIRCUIT DESCRIPTION

The electronics of the battery charger consists of the Prime Power Supply and its controls, the Timing Circuit and its controls, the Charging Circuits and controls (five identical circuits), and the Metering Circuit and controls. The overall schematic and electrical block diagram are shown in Figures 2-8 and 2-9.

2.3.1 Prime Power Supply and Controls

The battery charger operates from either 115 VAC ±10% or 230 VAC ±10%, 47 to 63 Hz, single phase power sources. This prime power enters through a captive power cable terminated in a plug (UP-221M) with a separate ground lead connected to the charger chassis. (An adapter plug or cable, not supplied, is required for 230 volt operation.) A 10 amp circuit breaker/power switch (CB1) interrupts both sides of the ac line. It also has a third switch section to interrupt the internal memory circuit battery. The breaker is followed by an

interlock (S6) to interrupt the ac power when the cover is removed from the charger. Each side of the entering line is bypassed to the chassis by an EMI filter network (FL1 and FL2).

The dc power for all functions is derived from a single power transformer (T1). The transformer has two primary windings which are parallel connected for 115 volt operation and series connected for 230 volt operation. The switching function for selecting series or parallel connection is performed by a double pole/double throw locking toggle switch (S1) recessed in the rear panel of the unit. The green POWER ON pilot light is a 28 volt incandescent bulb (DS1) energized by a tap on one of the T1 primary windings. This approach is used to combine adequate illumination with reliable bulb life and low power consumption.

Two secondary windings develop the dc voltages used in the charger. The output of a 17 volt RMS winding is rectified by a full wave bridge consisting of four discrete diodes (A11 - CR2 through CR5) with a 390 mf. capacitor input filter (A11 - C1). An LM 109K series regulator (A11 - U1) supplies a regulated 10 volt output to the Timing Circuit and through contacts of timing control relay (K1) to the reference amplifiers for the Charging Circuits.

Potentiometer (A11 - R2) is used to set the 10 volt output level of A11 - U1. A 12 volt 5 watt zener diode (CR1) and a 1 amp fuse (F1) protect the Timing Circuit components from overvoltage which might result in the event of A11 - U1 failure. Test points, protected by 10 K series resistors, are provided for the rectifier output and the 10 volt output. Steady state output from this supply is 0.4 amp maximum.

The other secondary winding (50 volts RMS) supplies the battery charging current to the five Charging Circuits, using a bridge rectifier assembly (A11 - BR1), and a 4100 mf. capacitor filter (C1). The DC output at nominal line voltage and maximum load is approximately 62 volts. A test point is provided for measuring this voltage.

2.3.2 Timing Circuit

The function of the timing circuit (A12) is to control the charging time of the batteries connected to the charger. In order to provide accurate timing independent of line frequency, the timer is designed as a digital "down" counter with an RC oscillator generating the clock frequency. A thumbwheel switch assembly (S3) on the front control panel of the charger is used to set the charging time. When the power on/off circuit breaker is turned on, the

THIS DOCUMENT HAS BEEN PURCHASED BY THE GOVERNMENT AND MAY BE REPRODUCED AND USED IN CONNECTION WITH ANY GOVERNMENT PROCUREMENT OR MAINTENANCE OPERATION

NOTE
DATA MARKED WITH AN ASTERISK (*) IS PECULIAR TO A PRIOR MANUFACTURER. IT DOES NOT TAKE PRECEDENCE OVER ANY OTHER DATA ON THIS DRAWING, AND IS NOT CONTRACTUALLY BINDING ON EITHER THE CONTRACTOR OR THE GOVERNMENT.

NOTES:
1. WORKMANSHIP SHALL BE IN ACCORDANCE WITH MIL-STD-454, REQT 9.
2. DIMENSIONS AND TOLERANCES PER ANSI Y14.5.
3. UNLESS OTHERWISE SPECIFIED ALL SURFACES SHALL NOT EXCEED 63 PER ANSI STD B46.1.
4. MATL FOR FIND NOS 1, 2 & 3: AL ALY 6061-T4 PER QQ-A-250/11 (FIND NO. 4). FIND NOS 1 & 3 SHALL BE .062 THK STK. FIND NO 2 TO BE .093 THK STK.
5. PUNCHING AND MACHINING OPERATIONS ON FIND NOS. 1 & 2 TO BE DONE WITH ALLOY IN THE (T4) CONDITION, PRIOR TO BENDING. ANNEAL FIND NOS. 1 & 3 TO THE (TO) CONDITION PER MIL-H-6088.
6. BRAZE PER MIL-B-7883, TYPE V, CLASS B.
7. IDENTIFY PER MIL-STD-130.
8. FINISH: CHEM FILM, CLASS 1A PER MIL-C-5541. THEN PAINT ALL EXTERIOR SURFACES AND INTERIOR SURFACES INDICATED PER P519M OF MIL-F-4072 USING PRIMER MIL-P-23377.

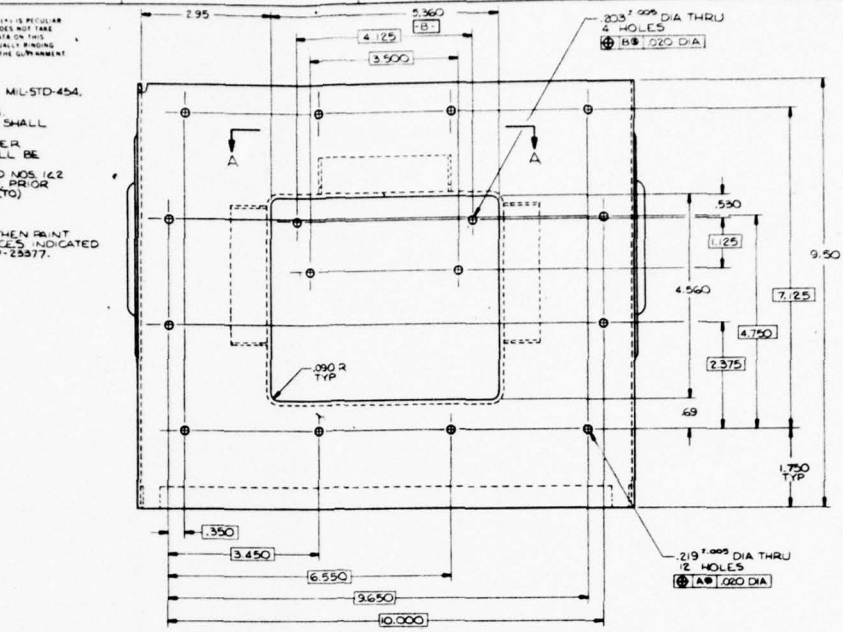

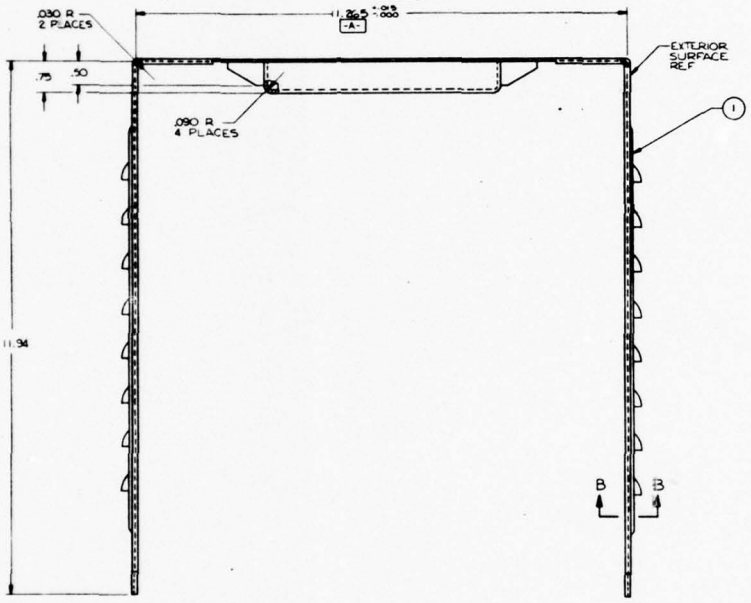

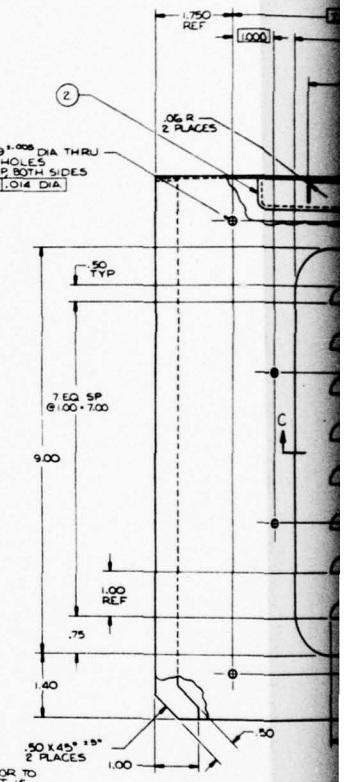

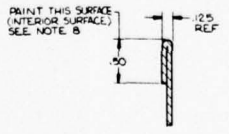

SECTION B-B
SCALE: 2/1

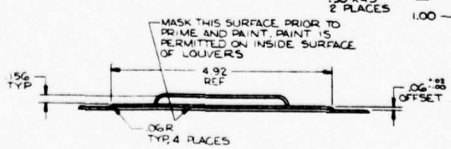

SECTION C-C
TYP, 2 PLACES

Figure

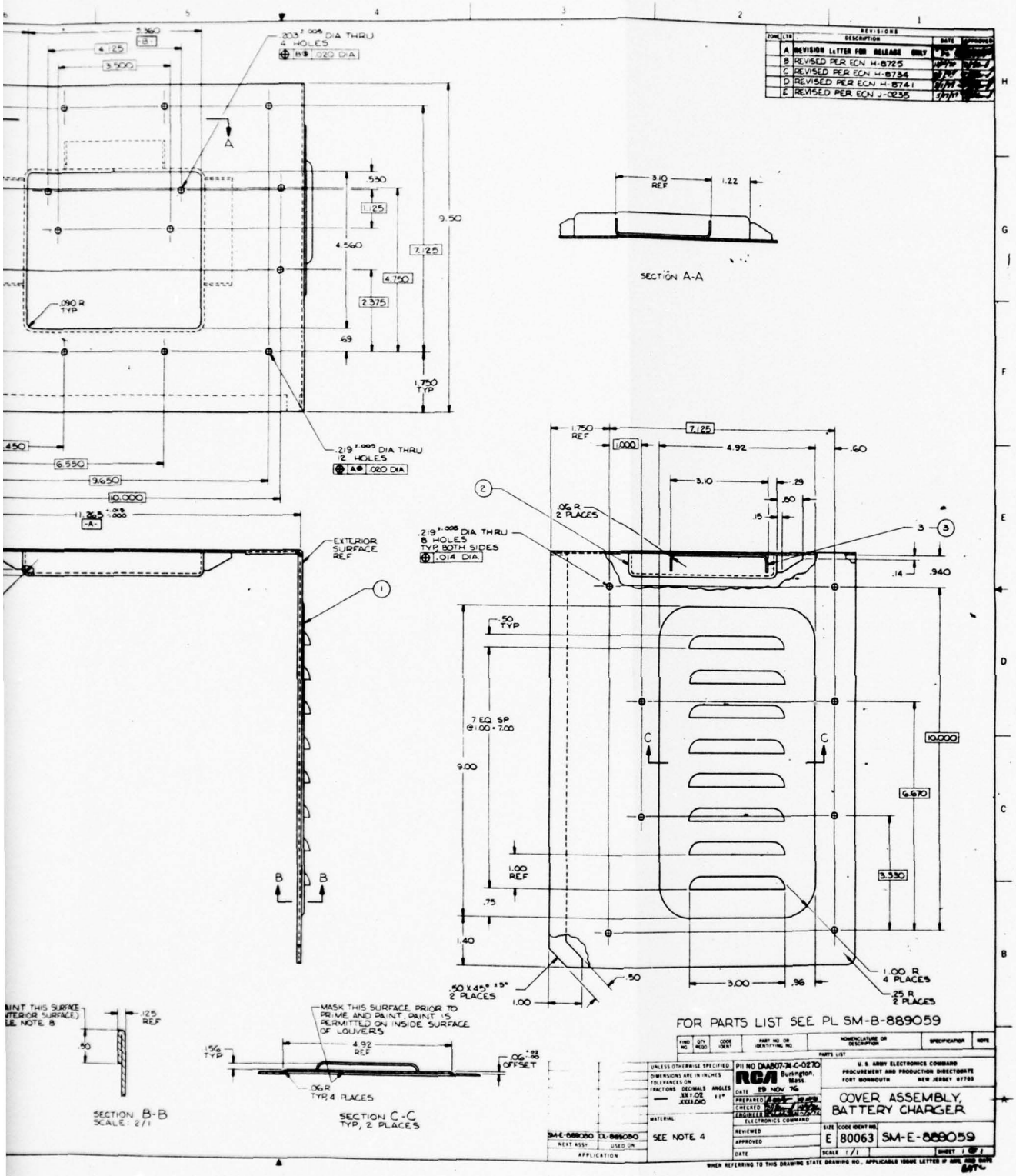

Figure 2-7. Cover Assembly

2

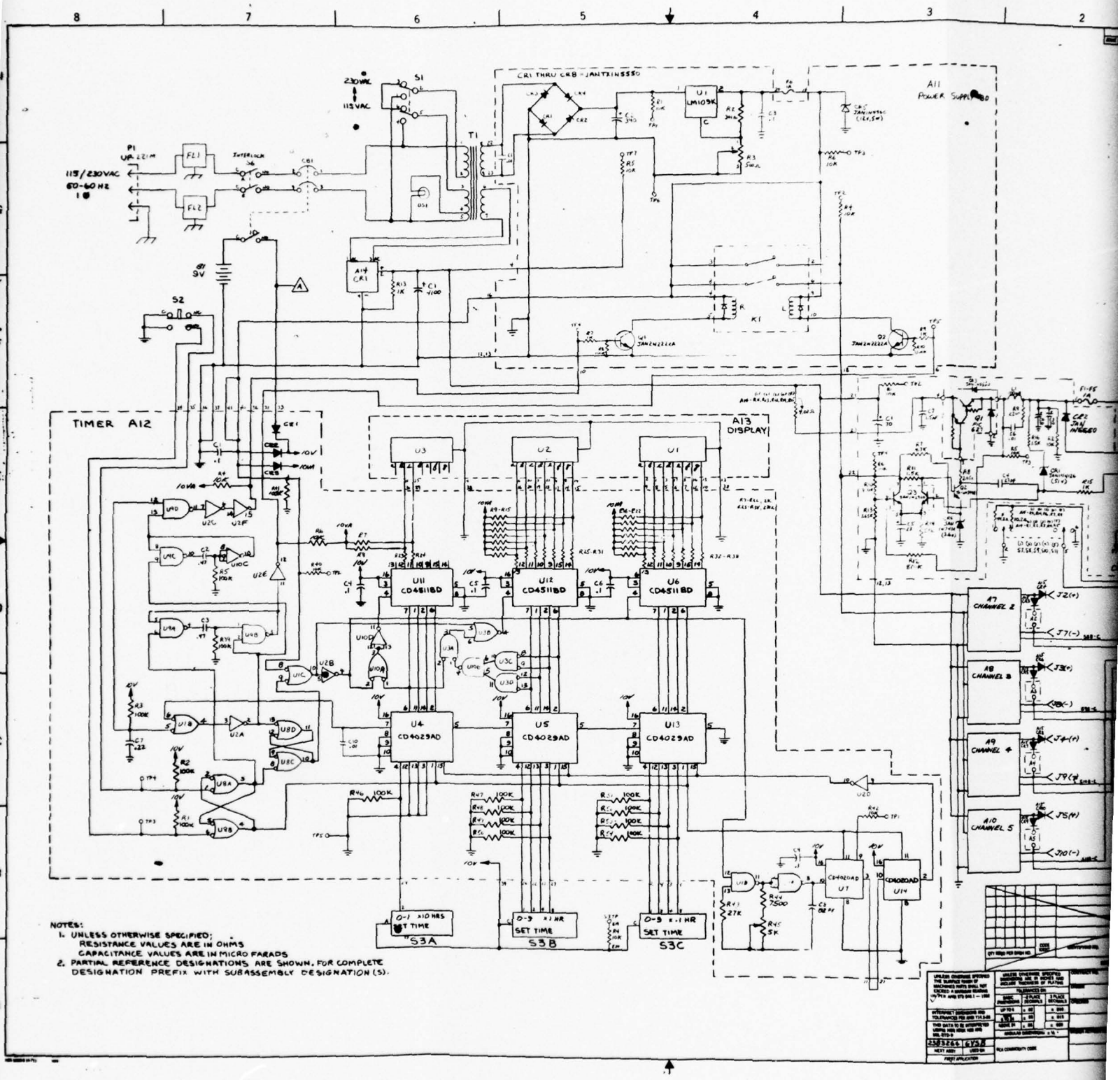

Figure 2-8. Batt
Sche

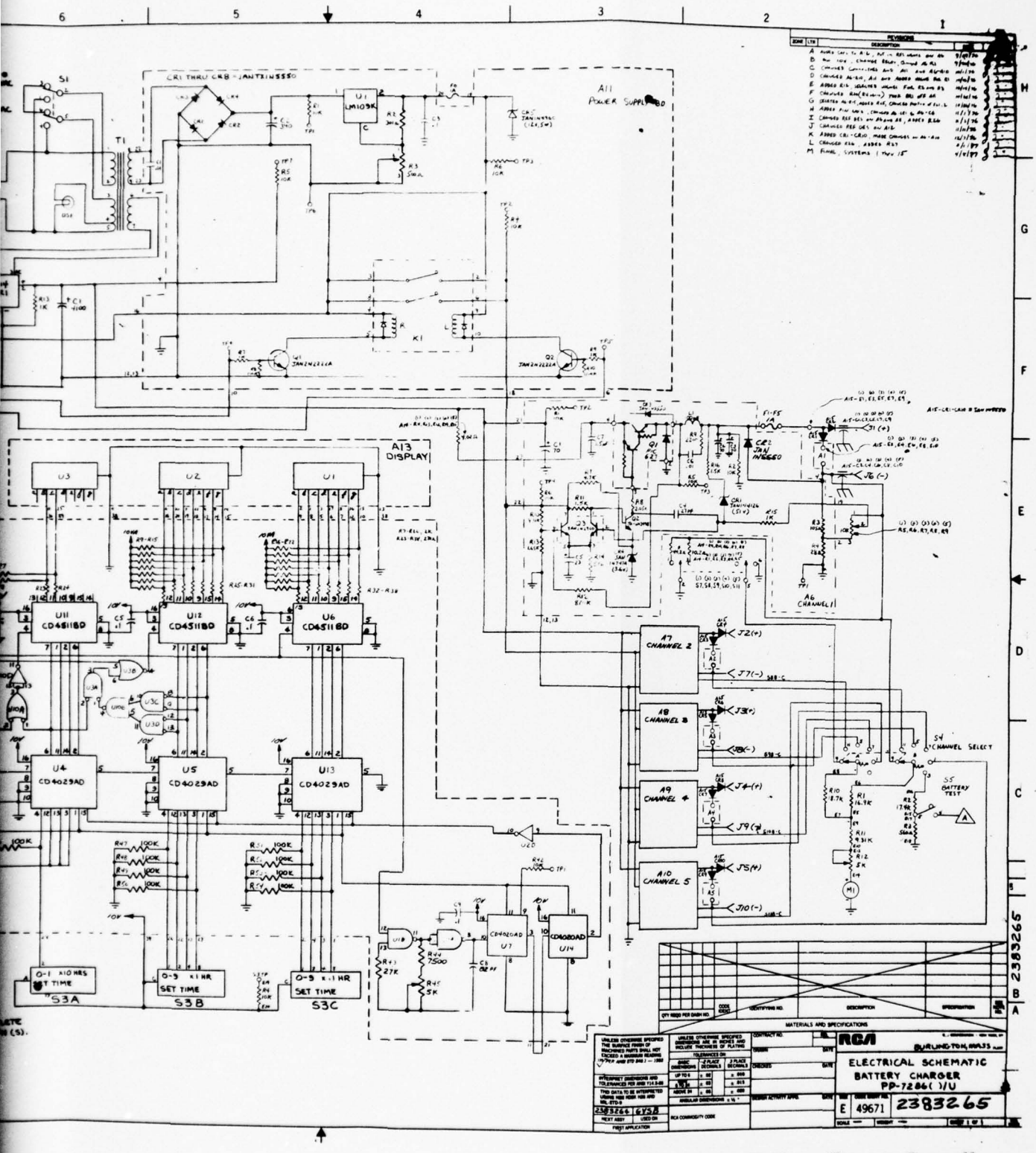

Figure 2-8. Battery Charger Overall Schematic

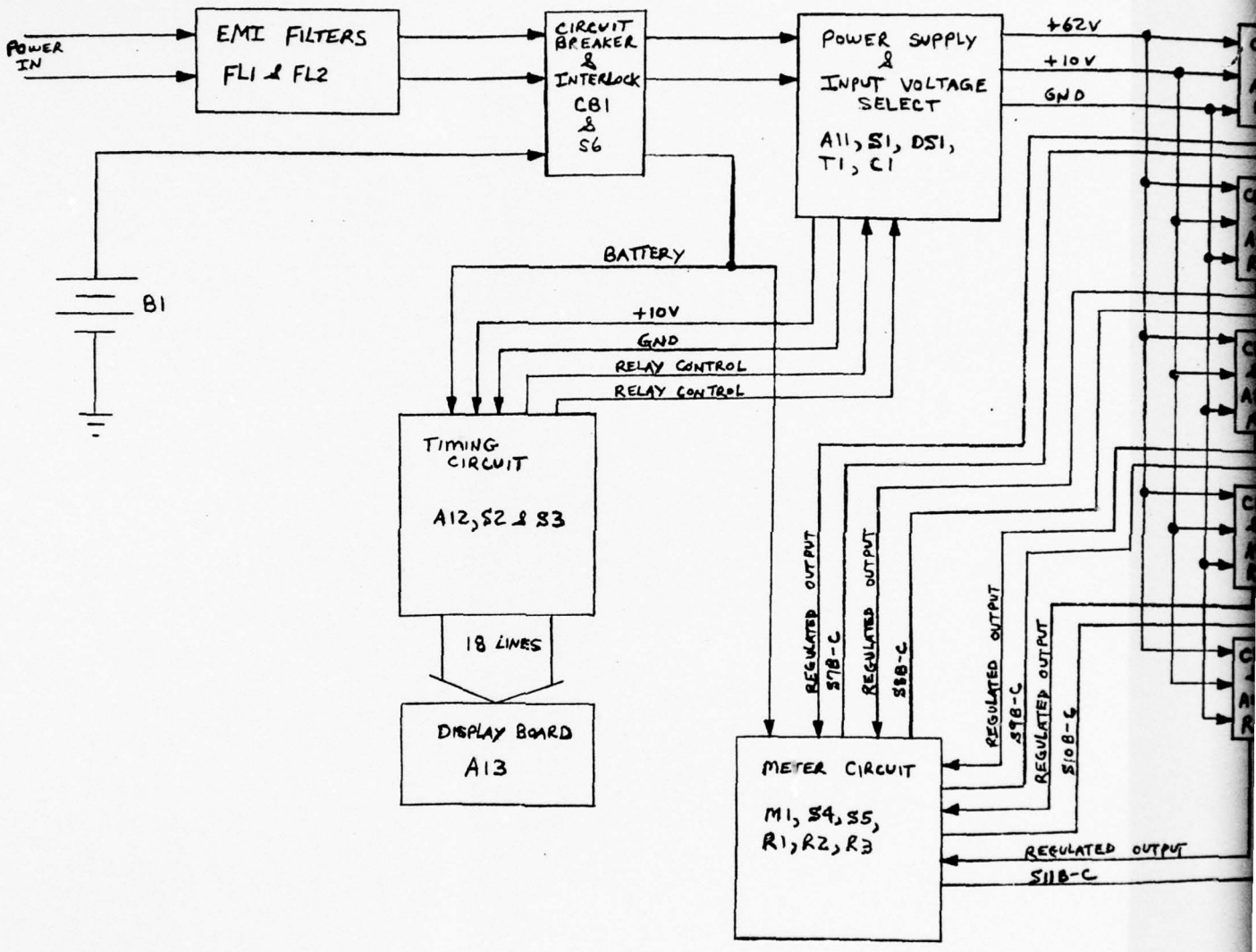
POWER IN
EMI FILTERS
FL1 & FL2
CIRCUIT BREAKER & INTERLOCK
CB1 & S6
POWER SUPPLY & INPUT VOLTAGE SELECT
A11, S1, DS1, T1, C1
+62V
+10V
GND
B1
BATTERY
+10V
GND
RELAY CONTROL
RELAY CONTROL
TIMING CIRCUIT
A12, S2 & S3
18 LINES
DISPLAY BOARD
A13
REGULATED OUTPUT
S7B-C
REGULATED OUTPUT
S8B-C
REGULATED OUTPUT
S9B-C
REGULATED OUTPUT
S10B-C
METER CIRCUIT
M1, S4, S5, R1, R2, R3
REGULATED OUTPUT
S11B-C

Figure 2-9.

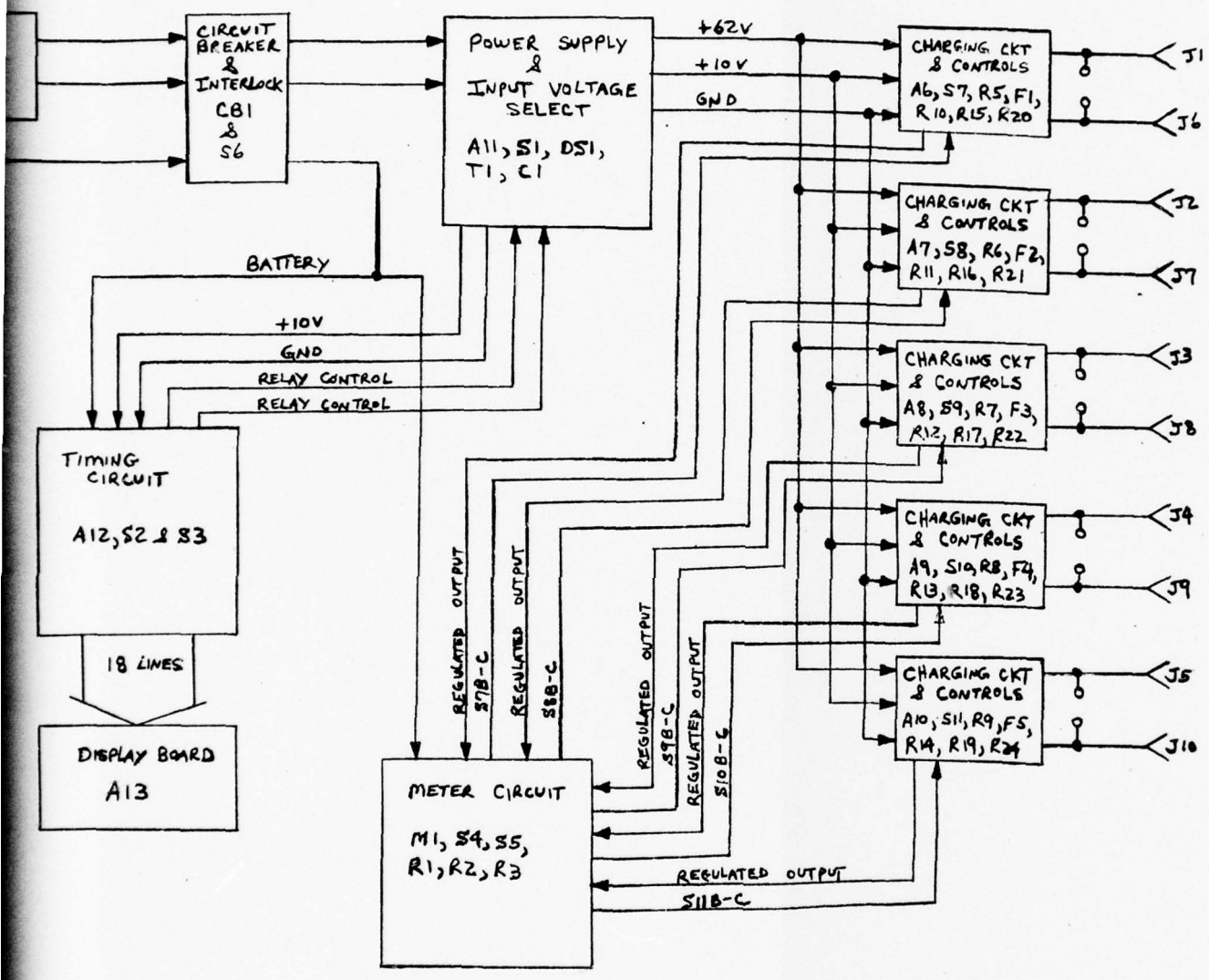

Figure 2-9. Battery Charger Electrical Block Diagram

2

power on reset formed by A12 - C1 and R20 causes the output of U8F to go high for a minimum of five milliseconds which turns on A11 - Q1 and ensures that A11 - K1 starts off in the reset state. It also causes the cutput of U8A to go low for the same amount of time and ensures that the R-S flip-flop formed by U9C and U9D is in the reset state.

Timing is initiated by pushbutton switch (S2). The R-S flip-flop formed by U9A and U9B changes state during the time that S2 is depressed, which:

(1) resets counters U10 and U11;

(2) presets the number from S3 into "down" counters U4, U5, and U6;

(3) triggers the one-shot formed by U12A, U12B, C8, and R19 which turns on A11 - Q2 and latches A11 - K1; and

(4) causes the R-S flip-flop formed by U9C and U9D to change state which enables display drivers U1, U2, and U3 and allows the number from S3 to be displayed on A13-DS1 and also enables the 372.827 kHz oscillator formed by U7A, U7D, C6, R32, R33, and R34 (frequency adjust pot).

Flip-flops U13A and U13D blank U1 and A13 - DS1A whenever the output of U4 is a BCD zero. Flip-flops U13B, U14A, U14B, U14C, and U14D blank U2 and A13 - DS1B whenever the outputs of both U4 and U5 are BCD zeroes.

Flip-flops U10 and U11 combine to form a divide by 2^{27} counter so that the output of U11 is a positive 50% duty cycle pulse every six minutes. This pulse is the clock for U4, U5, and U6. When U4, U5, and U6 all count to zero, U4-7 goes low which:

(1) resets the R-S flip-flop of U9C and U9D which disables U1, U2, and U3, turns off A13 - DS1 and disables the oscillator; and

(2) triggers the one-shot formed by U12C, U13C, C7, and R18 which turns on A11 - Q1 and resets A11 - K1.

All the logic in the timing circuit operates from ten volts, through CR2. Resistors R35 through R50 limit the current to A13 - DS1 which is a five volt device. Resistors R2 through R17 keep five milliamps flowing through each of the filaments of A13 - DS1, from the ten volt supply through CR3. This "idling" current increases the filament resistance by warming up the filaments, to

avoid large inrush currents that might otherwise damage the display drivers when the display is turned on. If main power is interrupted, the logic of the timing circuit obtains power from the internal primary battery (B1) through A12 - CR1. Power to resistor R2 through R17 is removed since this would create a large drain on B1. At the time power is interrupted, U7C-10 goes high and U8B-4 goes low. This blanks the display drivers and disables the oscillator. When main power returns, the display drivers are enabled, the display illuminates and the oscillator turns on. Since power remained on the logic during the power interruption, the timing circuit resumes where it left off before the interruption occurred.

2.3.3 Charging Circuit

The function of the charging circuit and controls is to select and supply constant charging current to the batteries being charged. There are five of these circuits, each one capable of charging one battery.

The circuit utilizes a switching regulator with a variable output voltage. Potentiometers R5 through R9 control the voltage across a series sensing resistor network. Switches S7 through S11 select the sensing resistance in series with the batteries.

At the start of operation when A11 - K1 is latched, 10 volts is applied to the switching circuit. The 10 volts has three functions:

(1) it develops 1.5 volts reference at Q3-2 which turns on one side of Q3;

(2) it supplies keep-alive current to zener diode CR4 for Q2 emitter bias; and

(3) it supplies base current to Q2 through R1, turning on Q2 and Q1.

The output voltage rises until the voltage at the arm of the potentiometer (R5 through R9) is about 1.5 volts. At this time the other side of Q3 turns on which turns off Q2 and Q1. CR4 provides emitter bias to ensure that Q2 can be turned off. Feedback components C3 and R16 give the circuit sufficient hysteresis to prevent oscillation. Storage capacitors C2 and C4 discharge through R6 when the circuit turns off or when the output is opened. Diode CR2 prevents the battery from discharging through the switching circuit. Fuses F1 through F5 and CR3 protect the switching circuits against battery polarity reversal. Resistors R20 through R24 (one per circuit) protect Q1 by limiting capacitor in-rush current when the circuit is first turned on or when the output is opened.

Two test points are supplied (through 10K series resistors) to test input voltage and 10 volts to each charging circuit. A test point is also supplied to check circuit grounds.

2.3.4 Meter Circuit

The meter circuit monitors the current from the charging circuit to which it is connected by S4 and S5. The combination of M1 with R12, R11, and R1 acts as a voltmeter to measure the voltage across the sensing resistors of the selected charging circuit. This voltage is an analog of the output current. For each of the three positions of S7 through S11, the operator reads the corresponding scale on the meter. The three meter scales are: 0-50 milliamp, 0-200 milliamp, and 0-700 milliamps. The maximum required output current is 700 milliamperes, so the third meter scale is only enumerated to 700, although full scale deflection is 1000 milliamperes.

Resistor R10 is switched to shunt a portion of the meter multiplier in this position. The resistor value is chosen so that 70% deflection is equivalent to the full specified output current of the charging circuit (700 mA).

R12 is a 5000Ω adjustable resistor to compensate for meter resistance and full scale accuracy variations. It is initially adjusted to provide full scale indication of 50.0 mA on one of the charging channels when the channel output is adjusted to 50.0 mA.

The battery test switch (S5) switches the internal battery (B1) to a 560Ω load and to the meter, through R1 and R2. The value of R2 is selected so that if the meter reads in the unmarked section (above 700) of the scale, the internal battery condition is acceptable. If the reading is below 700, the battery should be replaced.

2.3.5 Modifications from the Design Plan

Several minor changes from the circuits analyzed and presented in the Design Plan were incorporated in the final design discussed herein. The design analysis has been modified to reflect any significant effects of the changes.

2.3.5.1 Power Transformer

The low voltage secondary winding was changed from 17 volts full load to 15 volts no load, with regulation of 15% no load to full load.

The higher voltage secondary winding specification was changed from 47 volts full load with 5% regulation to 50 volts no load and 10% regulation.

2.3.5.2 Bleeder Resistor

A 1000 ohm bleeder resistor was added across the output of the charging d-c supply for circuit protection and safety. Under normal full load conditions, the bleeder increases the dissipation of the Battery Charger by four watts, which has negligible effect on temperature rise.

2.3.5.3 Meter Switching

The sixth position of the meter selector switch was added to simplify checking the condition of the memory circuit primary battery and to eliminate metering circuit interaction. It also permits use of a simple single pole momentary switch for battery test.

2.3.5.4 Meter Multiplier Adjustment

A 5000Ω precision trim rheostat was added in series with the panel meter and the value of the fixed series resistor was reduced from 13,700 to 9310 ohms. The circuit will thus accommodate meters having resistances from 1700 ohms to 6600 ohms. This allows multiple sourcing of meter and provides the advantage of trimming out production tolerances of meters and multiplier resistors.

2.3.5.5 Decoupling Capacitor

A 1.5 μf capacitor was added at the input to the switching regulator on each charging module to reduce interaction between charging modules.

2.3.5.6 Voltage Limiter

A zener diode and series resistor were added from the output capacitor to the input to control transistor, Q3A, on each charging channel. The zener diode conducts only under a no-load condition to limit the open circuit output voltage to less than 60 volts, for operator safety.

2.4 BATTERY CHARGER CIRCUIT ANALYSIS

All battery charger circuits were analyzed for effects of tolerance variations due to initial values, temperature and aging. Part ratings were determined for worst case conditions of input line voltage 20% above the specified high line, full load, short circuit and open circuit on all charging channels, and for turn-on and turn-off transient conditions. Certain of the critical analyses are reported below. (Refer to Electrical Schematic Diagram Figure 2-8.)

2.4.1 Power Supply

2.4.1.1 Transformer T1 AC Inputs

The charger must operate from a nominal 115/230 vac, ±10% single phase source, 50 or 60 Hz, ±5%.

(1) 115 vac +10% = 126.5 volts rms = 179 volts peak
(2) 115 vac -10% = 103.5 volts rms = 146 volts peak
(3) 230 vac +10% = 253 volts rms = 358 volts peak
(4) 230 vac -10% = 207 volts rms = 293 volts peak
(5) 50 Hz -5% = 47.5 Hz
(6) 60 Hz +5% = 63 Hz

2.4.1.2 Transformer T1 AC Outputs (No Load)

(1) 15 vac +3% = 15.5 volts rms = 22 volts peak
(2) 15 vac -3% = 14.5 volts rms = 20.5 volts peak
(3) 50 vac +3% = 51.5 volts rms = 73 volts peak
(4) 50 vac -3% = 48.5 volts rms = 69 volts peak

2.4.1.3 Overvoltage Test Condition

MIL-STD-1281, para. 5.6.8 requires that the input to the equipment be capable of operating for a duration of 5 minutes with the input line voltage raised an additional 20% above the expected high line voltage. (Test to be performed at ambient, only, per para. 5.3.1 of MIL-STD-1281.)

(1) 115 vac High Line +20% = (126.5) (1.2) = 152 volts rms
= 215 volts peak

(2) 230 vac High Line +20% = (253) (1.2) = 304 volts rms
= 429 volts peak

Full Load

50 vac High Line +20% = 62 volts rms = 87 volts peak

(Regulation, no load to full load, 10% offsets 10% high line)

Dissipation of the 1000 ohm bleeder resistor, R13, is 7.6 watts under this condition. This resistor is type RER65F1001M, rated at 10 watts.

Full Load

15 vac High Line +20% = 18 volts rms = 25 volts peak

Pilot Light High Output +20% = (25) (1.36) = 34 vac rms

This lamp is designed to operate at 28 volts. A five minute overvoltage of 20% will have negligeable influence on the life of the lamp.

The peak voltage appearing at the output of the low voltage full wave bridge will be 25 volts less two diode drops = 25 - 1.2 ≅ 24 volts. The rated reverse working voltage of the 1N 5550 is 200 volts. Rated peak surge current is 100 amps. Assuming a high line voltage at 63 Hz, the diode bridge will see a maximum surge current due to the initial charging of capacitor C1 (390 μF).

C1 is a M39018/01-0730 Rated DC Voltage = 30 volts @ 85°C
Rated DC Surge Voltage = 40 volts @ 85°C
Purchase Tolerance -10, +75%

$$C_{max} = (1.75)\,(390) = 680\ \mu F$$

$$i = C\frac{dv}{dt} = 680 \times 10^{-6} \times \frac{24\ v}{3.96 \times 10^{-3}} = 4.12\ \text{amps}$$

Both surge current through the bridge and the surge voltage (24 volts) on the capacitor are well within the acceptable limits on the components.

2.4.2 Switching Regulator Reference Voltage Analysis

The reference voltage for the switching regulator is developed by monolithic voltage regulator, (LM109K). This device is normally utilized to provide a TTL Logic Level voltage of 5 vdc, but in this application, the device is floated and a 10 vdc level is developed. The output level is adjusted by potentiometer R2 (500Ω).

The LM109K has an absolute maximum input voltage level rating of 35 volts. Previously determined maximum input voltage level was found to be 24 volts under full load, 29 volts no load. Recommended operating input voltage range is 7 volts to 25 volts. Nominal input voltage will be 20 vdc.

Minimum rated start-up voltage of the LM109K is 9 volts. The minimum input level supplied to the device will be 17.6 - 1.6 = 16 volts.

R2 500Ω RTR 12 DY501M

±50 PPM/°C, 0.75 watts

R1 301Ω RNC65K3010FM

±100 PPM/°C, 0.5 watt, initial tol. ±1.0%

±2% resistance change possible due to combined environmental conditions

Operating Temperature Range

-25°F to 145°F

-32°C to 63°C $\begin{pmatrix} -57°C \text{ relative to } 25°C \\ +38°C \text{ relative to } 25°C \end{pmatrix}$

R1 301Ω +1.0% = 304Ω

-1.0% = 298Ω

The reference voltage will be most sensitive to quiescent current changes and resistance changes when the resistance value of R2 is maximized. R2 will be largest when the initial value of R1 is the largest.

$(304)\ (1 + 100 \times 10^{-6} \times 38) = 305.2\Omega$

$(304)\ (1 - 100 \times 10^{-6} \times 57) = \underline{302.4\Omega}$

$\Delta = 2.8\Omega$ over temp. range

LM109K Maximum Quiescent Current Change = 1.30 ma

Nominal Quiescent Current @ 1 amp Load = 4.20 ma

LM109K Minimum Output Voltage = 4.70 v

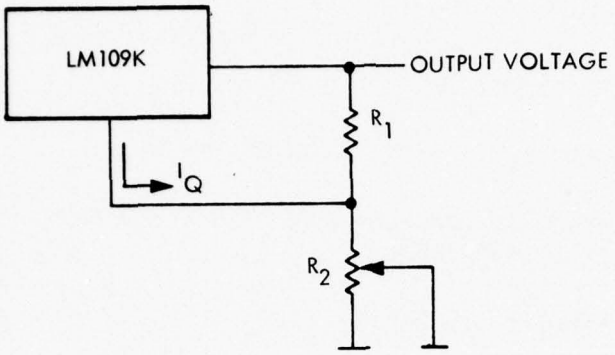

With the regulator providing 4.7 volts, R1 = 304, I_Q = 4.20 mA. A 10.0 volt output will be developed when

$$I_{R2} = \frac{4.70\ v}{304\ \Omega} + 4.20\ mA = 19.7\ mA$$

$$10.0\ v - 4.70\ v = 5.30\ v$$

$$R_2 = \frac{5.30\ v}{19.7\ mA} = 269.6\Omega$$

The LM109K will produce a -0.025 volt change in regulated output voltage in going from 25°C to 63°C. R1 will undergo a change from 301Ω to 305.2Ω over the same range. In addition the quiescent current will change from 4.2 mA to 2.9 mA.

The output voltage will then be given by

$$\text{Regulator Output} = 4.70 - 0.025 = 4.67 \text{ volts.}$$

$$\frac{4.67}{305.2} = 15.3\ mA$$

$$269.6\ (1 - 50 \times 10^{-6} \times 38) = 269.0\Omega$$

Reference Voltage = 4.67 + (269.0) (15.3 ma + 2.9 ma)

= 9.57 volts.

The output voltage of the LM109K is supplied to the differential amplifier Q3:

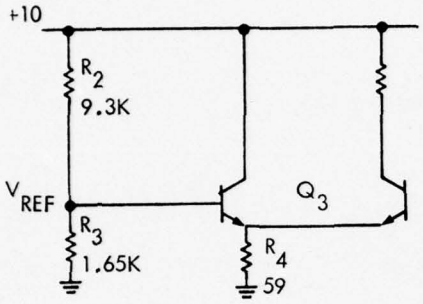

R_2 = RNC55K9311BM

±100 PPM/°C ± 0.1% initial tol.

R_3 = RWC55K1651BM

±100 PPM/°C ±0.1% tol.

$$V_{REF} = \frac{(10)\ (1.65 \times 10^3)}{(9.3 + 1.65)\ 10^3} = 1.50 \text{ volts}$$

The worst case V_{REF} change will occur when the previously determined LM109K output is applied while R2 increases and R_3 decreases.

$9.3 \times 10^3\ (1 + 100 \times 10^{-6} \times 38) = 9.33K$

$1.65 \times 10^3\ (1 - 100 \times 10^6 \times 38) = 1.64K$

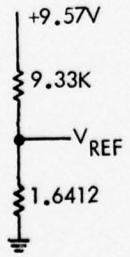

$$V_{REF} = \frac{9.57 \text{ v } (1.64K)}{9.33K + 1.64K} = 1.43 \text{ v}$$

$$\Delta V_{REF} = \frac{1.43}{1.50} = 0.953 = 4.7\% \doteq \pm 2.3\% \text{ variation}$$

LM109K Rated Output Current = 1.5 amps

Max Regulated Output Voltage = 5.35 volts

$R_{3\ min} = 298\ (1 - 100 \times 10^{-6} \times 57) = 296.$ ohms

$\frac{5.35\ v}{296\Omega}$ = 18 ma for fixed regulator load resistor

$\frac{10.3}{9.2K + 1.64K}$ = 0.95 ma for ref transistor bias

$\frac{0.9\ v}{58.6\Omega}$ = 15.3 ma for diff amp bias

CR-4 Zener Diode Bias Calculation

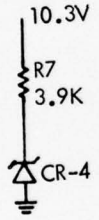

$R_{7\ min} = (4.7K)\ (0.85) = 3.9K$

$V_{Zmin} = 3.4$ v, $- 0.065\%/°C$

$\frac{10.3 - 3.4}{3.9K}$ = 1.76 ma

Total LM109K Current Drain = 5 (1.76 + 15.3 + 0.95 + 18)

= 180 ma max.

2.4.3 Worst Case Switching Transistor Peak Current

Assume that the following conditions obtain (worst case test per MIL-STD-128):

(1) 20% above High Line Voltage, High Transformer Winding, full load at start

$\therefore E_{DC} = (50 \times 1.2 \times 1.03 \times \sqrt{2}) - 1.2 = 86$ volt

(2) Source impedance of volts $\cong$ 0.2 ohms

(3) Series inductor is saturated by peak current

(4) Voltage drop across PIC 627 = 1 volt

(5) Maximum capacitance on output

(6) Capacitors are at maximum tolerance. Capacitor ESR $\cong$ 0 ohms

(7) Following equivalent circuit.

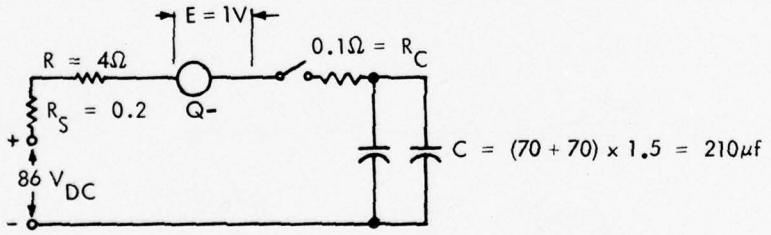

$$i = \frac{E}{R} \times E^{-\frac{t}{RC}} = \frac{(86-1)}{4} \times E^{\frac{-t}{8.4 \times 10^{-4}}}$$

$$i_{pk} = \frac{E}{R} = \frac{85}{4.3} = 19.8 \text{ A at } t = 0$$

Current decreases to 1 amp at t = 3 RC = 2.5 msec

The PIC 627 is rated to withstand repetitive surges of 20 amps for 8 milliseconds at 25% duty cycle.

2.4.4 Analysis of Metering Circuit Accuracy

The metering circuit and the current control circuit are switched simultaneously. The meter is used in conjunction with series resistors in the 50 and 200 milliampere ranges to monitor the voltage across the battery circuit sense resistance. A shunt resistor is added for the 1000 ma meter range. Accuracy of the metering circuit is 1% of full scale plus a percentage of the indicated current, which is a function of resistor value tolerances plus temperature effects. Maximum "worst case" inaccuracy occurs when the sensing resistor tolerances and shunt resistor are at one extreme and the meter series multipliers and meter are at the other extreme. The nominal and worst case conditions are tabulated for 25°C and -32°C. The ΔT from 25°C is 57°C at -32°C and only 38°C at +63°C, therefore the worst case occurs at -32°C. The analysis assumes that the trimmer resistor, R_R is adjusted so that the total multiplier resistance, $R_D + R_E + R_R + R_M$, is 32, 850 ohms at approximately 25°C. See Table 2-1.

2.4.4.1 Current Metering and Sensing Circuits

A. 50 Ma. Control and Meter Range. See Table 2-2.

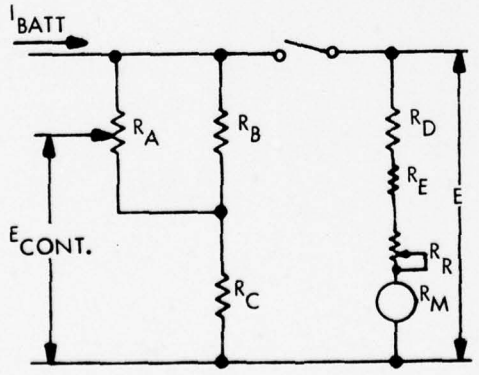

R_A 10,000Ω ± 10%. Temp. Coeff. ± 250 x 10^{-6}/°C (RVC65Y103B)

R_B 105.0Ω ± 0.1%. T.C. ± 50 x 10^{-6}/°C (RNC70H1050BM)

R_C 28.0Ω ± 1.0%. T.C. ± 30 x 10^{-6}/°C (RER45F28R0M)

R_D 16,900Ω ± 0.1%. T.C. ± 50 x 10^{-6}/°C (RNC55H1692BM)

R_E 13,700Ω ± 0.1%. T.C. ± 50 x 10^{-6}/°C (RNC55H1372BM)

R_M 2250Ω ± 20%. T.C. + 3.93 x 10^{-3}/°C (0-200 μa meter)

R_R 5000Ω Variable T.C. ± 50 x 10^{-6}/°C (RTR22DL502M)

B. 200 Ma. Control and Meter Range. See Table 2-3.

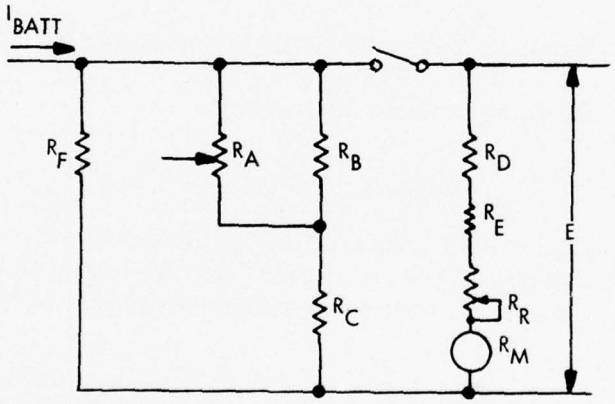

R_F 44.2Ω ± 1%. T.C. ± 30 x 10^{-6} /°C (RER40F44R2M)

Other values same as in 50 Ma. circuit

C. 700 Ma. Control Range. Meter 1000 Ma. F.S. See Table 2-4.

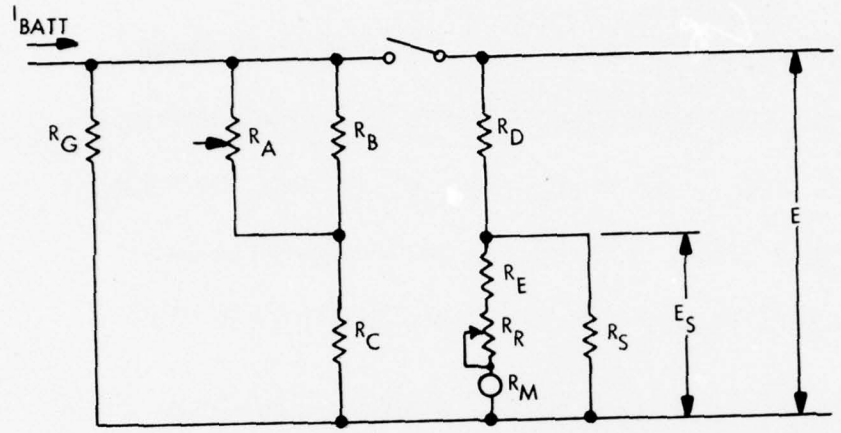

R_S 18,700Ω ± 0.1%. T.C. ± 50 x 10^{-6}/°C (RNC55H1872BM)

R_G 10.2Ω ± 1%. T.C. ± 30 x 10^{-6}/°C (RER45F10R2M)

Other values same as in 50 Ma. circuit

Probable accuracy in setting meter current is approximately $^{+1\%}_{-2\%}$ of indicated current at room temperature. At -32°C current may be low by an additional 1% of the indicated reading, due to the temperature coefficient of the meter winding.

At the range extremes, probable current values when current is set to the indicated value should fall within the range indicated:

50 Ma Range		200 Ma Range		700 Ma Range	
Indicated	Actual	Indicated	Actual	Indicated	Actual
50.0	48 to 52	200.0	195 to 204	700	670 to 717
15.0	14 to 16	50.0	47 to 53	200	190 to 210

Table 2-1. Meter Circuit Resistor Values

Resistor	Nom. Res Ω	25° C Extremes		Temp. Effect 57° C ΔT Ω	-32° C Extremes	
		Max Ω	Min Ω		Max Ω	Min Ω
R_A	10,000	11,000	9,000		11,157	8,872
R_B	105.0	105.1	104.9	±0.3	105.4	104.6
R_C	28.0	28.28	27.72	±0.048	28.33	27.67
R_D	16,900	16,917	16,883	±48	16,965	16,835
R_E	9,310	9,319	9,301	±27	9,346	9,274
R_M	2,250	2,700	1,800	(-0.224R)	2,095	1,397
R_F	44.2	44.64	43.76	±0.076	44.72	43.68
R_G	10.2	10.3	10.1	±0.0174	10.32	10.08
R_S	18,700	18,719	18,681	±53	18,772	18,628
R_R (set)	4,390	4,840	3,940	±13	4,403	3,927

Table 2-2. Meter Circuit Calculations, 50 Ma. Scale

	R_A Ω	R_B Ω	R_C Ω	R_D Ω	R_E Ω	R_M Ω	R_R Ω	R_{MULT}	R_{PAR}	E = $R_{MULT} \times 2 \times 10^{-4}$ A V	Batt. Ma. Meter In	Batt. Ma. Meter Out	% Error Meter Out	% Error Meter In
25°C Nom.	10,000	105.0	28.0	16,900	9,310	2,250	4,390	32,850	131.4	6.57	50.0	49.8	-0.4	0
	11,000 MAX	105.1 MAX	28.28 MAX	16,883 MIN	9,301 MIN	1,800 MIN	4,866	32,850	131.9	6.57	49.8	49.6	-0.8	-0.4
	9,000 MIN	104.9 MIN	27.72 MIN	16,917 MAX	9,319 MAX	2,700 MAX	3,914	32,850	130.9	6.57	50.2	50.0	0	+0.4
-32°C Nom.	10,000	105.0	28.0	16,900	9,310	1,746	4,390	32,346	131.4	6.47	49.2	49.0	-2.0	-1.6
	11,157 MAX	105.1 MAX	28.33 MAX	16,835 MIN	9,274 MIN	1,397 MIN	4,853 MIN	32,359	132.2	6.47	49.0	48.8	-2.4*	-2.0
	8,872 MIN	104.6 MIN	27.67 MIN	16,965 MAX	9,346 MAX	2,095 MAX	3,923 MAX	32,329	130.5	6.47	49.5	49.3	-1.4	-1.0

*Worst Case

Table 2-3. Meter Circuit Calculations, 200 Ma. Scale

Condition	R_F Ω	R_{PAR} Ω	E Volts	$\frac{E}{R_{PAR}}$ Ma.	Meter Out Ma.	Meter Out % Error
25° C Nom.	44.20	33.07	6.57	198.7	198.5	-0.7
R_{SENSE} High	44.64	33.35	6.57	197.0	196.8	-1.6
R_{SENSE} Low	43.76	32.80	6.57	200.3	200.1	
-32° C Nom	44.20	33.07	6.47	195.6	195.4	-2.3
R_{SENSE} High	44.72	33.42	6.47	193.6	193.4	-3.3*
R_{SENSE} Low	43.68	32.73	6.47	197.7	197.5	-1.2

*Worst Case

Table 2-4. Meter Circuit Calculations, 700 Ma. Control, 1000 Ma. Scale

Condition	R_G Ω	R_{PAR} Ω	E Volts	I_{BATT} Ma.	I_{BATT} Meter Out	Meter Out % Error
25°C Nom.	10.2	9.465	6.617	699.1	698.9	-0.16
	10.3 (High)	9.554 (High)	6.617 ±.002	692.4	692.2	-1.1
	10.1 (Low)	9.377 (Low)	6.617 ±.002	708.9	708.7	+1.3
-32°C Nom.	10.1	9.465	6.481 ±.003	684.7	684.5	-2.2
	10.32 (High)	9.573 (High)	6.487 ±.003	677.0	676.8	-3.3*
	10.08 (Low)	9.357 (Low)	6.481 ±.003	692.6	692.8	-1.0

*Worst Case

2.4.5 Analysis of Charging Time Variation

The circuit which controls the accuracy of charging time is the 383 kHz clock oscillator formed by active devices U7A and U7D and associated resistors and capacitor R33, R34, and C6. The settability and frequency stability of this oscillator circuit are analyzed below.

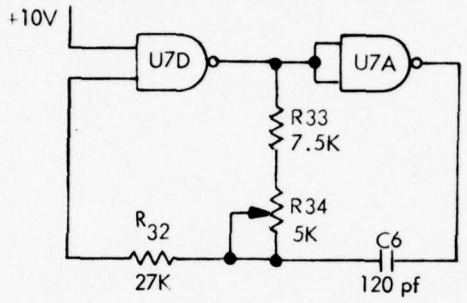

U7	JM38510/05001BCA	(CD4011)
C6	CMR04E121FPAM	(Dipped Mica, 120 pf)
R32	RCR05G273JS	
R33	RNC60H7501FM	
R34	RTR22DW502M	

C6	120 pf ± 1% Initial Tol.	Temp Coef -20, +100 PPM/°C
R32	27K ± 5% Initial Tol.	±15% ΔR over Life
R33	7.5K ± 1% Initial Tol.	±2% ΔR over Life, 100 PPM/°C
R34	5K pot ± 30 PPM/°C	

Design Criteria for R32 in this circuit configuration:

$$R_{32_{min}} > 2\,(R_{33} + R_{34}) > 2\,(7.528 \times 10^{3} + 2.663 \times 10^{3} > (10.191)\,2 > 20.38K$$

$$R_{32_{min}} = \left[(27 \times 10^{3})\,(0.95)\right]\,(0.85) = 21.8K$$

$$R_{32_{min}} > \frac{V_{DD} - V_{SS}}{5 \times 10^{-3}} = \frac{10.04}{5 \times 10^{-3}} = 2.008K$$

The CMOS oscillator configuration utilized here has a negligible shift in threshold over temperature. However, the threshold will vary from unit to unit. The formula governing the period of oscillation, T is:

$$T = - RC \left[\ell n \frac{V_{TH}}{V_{DD} + V_{TH}} + \ell n \frac{(V_{DD} - V_{TH})}{(2\,V_{DD} - V_{TH})} \right]$$

This equation is derived as follows (the diagrams show the two switching states of the oscillator):

CASE I

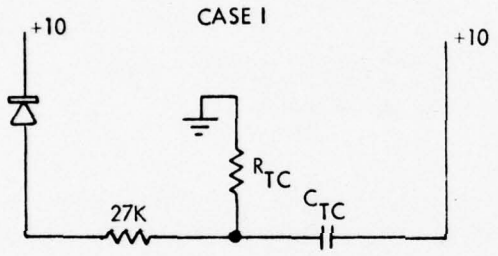

$R_{TC} = R_{33} + R_{34}$

$C_{TC} = C_6$

CASE II

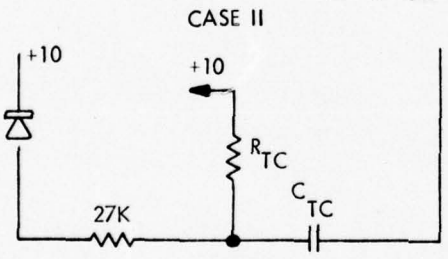

In Case I, the output of the oscillator has just gone high. The charge on the capacitor when the output has just switched high is V_{TH}. The voltage at the junction of R_{TC} and C_{TC} is forced to $V_{DD} + V_{TH}$. This voltage starts to decay toward zero, and is governed by the relationship

$$V_{junction} = (V_{DD} + V_{TH})\, e^{-t/RC}$$

The input gate of the oscillator will flip when the decaying V_j is equal to V_{TH}. The first half of the waveform period is then found as follows:

$$(V_{DD} + V_{TH})\, e^{-t_1/RC} = V_{TH}$$

$$e^{-t_1/RC} = \frac{V_{TH}}{V_{DD} + V_{TH}}$$

$$\ell n\, e^{-t_1/RC} = \ell n\, \frac{V_{TH}}{V_{DD} + V_{TH}}$$

$$t_1 = -RC\left[\ell n\, \frac{V_{TH}}{V_{DD} + V_{TH}}\right]$$

In Case II, the output of the oscillator has just gone low, forcing the voltage at V; to $V_{TH} - V_{DD}$. The voltage at the other side of R_{33} is now + 10 volts. The charging circuit is now as shown below:

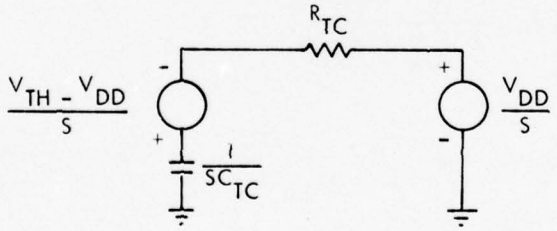

$$I(S)\left[\frac{1}{SC_{TC}} + R_{TC}\right] = \frac{V_{DD}}{S} - \left(\frac{V_{TH} - V_{DD}}{S}\right) = \frac{2\,V_{DD} - V_{TH}}{S}$$

$R_{TC}ICS$ will then be the voltage drop across R_{TC}.

$$R_{TC}I(S) = R_{TC} \frac{\left|2\,V_{DD} - V_{TH}\right|}{S + \frac{1}{RC}}$$

$$Ri(t) = (2\,V_{DD} - V_{TH})\, e^{-t_2/RC}$$

The system will flip again as the threshold of the input gate is crossed. The threshold (V_{TH}) is equal to:

$$V_{TH} = V_{DD} - Ri(t)$$

$$Ri(t) = V_{DD} - V_{TH}$$

$$(2\,V_{DD} - V_{TH})\, e^{-t_2/RC} = V_{DD} - V_{TH}$$

$$e^{-t_2/RC} = \frac{V_{DD} - V_{TH}}{2\,V_{DD} - V_{TH}}$$

$$t_2 = RC \left[\ell n \frac{(V_{DD} - V_{TH})}{(2\,V_{DD} - V_{TH})}\right]$$

$$T = t_1 + t_2 = -RC \left[\ell n \frac{V_{TH}}{V_{DD} + V_{TH}} + \ell n \frac{(V_{DD} - V_{TH})}{2\,V_{DD} - V_{TH}}\right]$$

$$T_{nominal} = \frac{360}{2^{27}} = 2.682 \times 10^{-6}$$

The minimum threshold generated at -55°C for the CMOS gates is 2.9 volts, and the maximum is 7.1 volts. This yields a factor of K:

$$K = \left[\ell n \frac{V_{TH}}{V_{DD} + V_{TH}} + \ell n \frac{(V_{DD} - V_{TH})}{(2\,V_{DD} - V_{TH})}\right]$$

$K_{2.9\ v} = 2.371 = K_{7.1}$

$K_{0.5\ v} = 2.197$

Having selected C6 = 120 pf nominal, calculate the tuning range of the circuit:

T = Oscillation Period = $2.682 \times 10^{-6} \pm 5\%$ sec

$T_{max} = 2.816 \times 10^{-6}$

$T_{min} = 2.547 \times 10^{-6}$

C6 120×10^{-12} ±1% Initial Tol. -20, +100 PPM/°C

Ambient	120 (0.99) = 118.8 pf	
	120 (1.01) = 121.2 pf	
+63°C	$118.8\ (1 - 20 \times 10^{-6} \times 38)$	= 118.70 pf
	$118.8\ (1 + 100 \times 10^{-6} \times 38)$	= 119.25 pf
	$121.2\ (1 + 100 \times 10^{-6} \times 38)$	= 121.66 pf
	$121.2\ (1 - 20 \times 10^{-6} \times 38)$	= 121.10 pf
-32°C	$118.8\ (1 - 20 \times 10^{-6} \times 57)$	= 118.66 pf
	$118.8\ (1 + 100 \times 10^{-6} \times 57)$	= 119.47 pf
	$121.2\ (1 + 100 \times 10^{-6} \times 57)$	= 121.89 pf
	$121.2\ (1 - 20 \times 10^{-6} \times 57)$	= 121.06 pf

Determine trimming range for $C6_{max}$ at ambient, $2.9 = V_{TH}$:

$$T = KRC = (2.371)\ (R)\ (121.2 \times 10^{-12}) = 2.682 \times 10^{-6}$$

$$R = \frac{2.682 \times 10^{-6}}{121.2 \times 10^{-12} \times 2.371} = 9.333K$$

Determine trimming range for $C6_{min}$ at ambient, V_{TH} = 2.9 volts:

$$R = \frac{2.682 \times 10^{-6}}{118.8 \times 10^{-6} \times 2.371} = 9.521K$$

Determine trimming range for $C6_{nom}$ at ambient, V_{TH} = 5 volts:

$$R = \frac{2.682 \times 10^{-6}}{120 \times 10^{-12} \times 2.197} = 10.172K$$

The selected values of C6, R33, and R34 enable the circuit to be tuned to the exact frequency for all values of C6 and thresholds running from 2.9 to 7.1 volts. It remains to be determined what the frequency will be at the temperature extremes. Since K is constant over temperature, the variation in frequency will be determined by the component value changes.

Given an initially high valued C6 at ambient and a V_{TH} of 2.9 volts, determine the pot setting:

$R = 9.333K$

$R_{33} = 7.5K \pm 1.0\%$, Assume Higher Value

$= (7.5K)\ (1.00) = 7.575K$

$R_{34} = 9.333K - 7.575K = 1.758K$

$R_{33_{-32°C}} = (7.575K)\ (1 + 100 \times 10^{-6} \times 57) = 7.618K$

$(7.575K)\ (1 - 100 \times 10^{-6} \times 57) = 7.531K$

$R_{33_{63°C}} = (7.575K)\ (1 + 100 \times 10^{-6} \times 38) = 7.603K$

$(7.575K)\ (1 - 100 \times 10^{-6} \times 38) = 7.546K$

$R_{34_{-32°C}} = (1.758K)\ (1 + 30 \times 10^{-6} \times 57) = 1.761K$

$(1.758K)\ (1 - 30 \times 10^{-6} \times 57) = 1.754K$

$R_{34_{63°C}} = (1.758K)\ (1 + 30 \times 10^{-6} \times 38) = 1.760K$

$(1.758K)\ (1 - 30 \times 10^{-6} \times 38) = 1.755K$

Calculate $T_{-32°C}$

$$T_{-32°C} = (121.1 \times 10^{-12}) (7.531K + 1.755K) (2.371)$$

$$T_{-32°C} = 2.665 \times 10^{-6}$$

Allowed $T_{-32°C}$ minimum per spec $= 2.547 \times 10^{-6}$

Given the same initial valued components, determine $T_{+63°C}$:

$$T_{+63°C} = (121.7 \times 10^{-12}) (7.603K + 1.760K) (2.371)$$

$$= 2.700 \times 10^{-6}$$

±5% T per Spec $= 2.816 \times 10^{-6}$

The above calculations indicate that the worst case variations of the capacitor C6 when selected for maximum initial value satisfy the spec. requirements.

The same calculations will be performed for a low valued C6:

$$T_{-32°C} = (118.7 \times 10^{-6}) (R) (2.371)$$

$$2.682 \times 10^{-6} = R (118.8 \times 10^{-12}) (2.371)$$

$$R = \frac{2.682 \times 10^{-6}}{(118.8 \times 10^{-12}) (2.371)} = 9.521K$$

$$R_{34} = 9.521K - 7.575K = 1.946K$$

$$R_{34_{-32°C}} = (1.946K) (1 + 30 \times 10^{-6} \times 57) = 1.949K$$

$$(1.946K) (1 - 30 \times 10^{-6} \times 57) = 1.942K$$

$$R_{34}{}_{+63°C} = (1.946K)\ (1 + 30 \times 10^{-6} \times 38) = 1.948K$$
$$(1.946K)\ (1 - 30 \times 10^{-6} \times 38) = 1.943K$$

$$T_{-32°C} = (118.7 \times 10^{-12})\ (7.531 \times 10^{-3} \times 1.942K)\ (2.371)$$
$$(2.665 \times 10^{-6})$$

$$T_{+63°C} = (121.7 \times 10^{-12})\ (7.603K \times 1.948)\ (2.371)$$
$$= 2.755 \times 10^{-6}$$

Allowable T_{max} per Spec $= 2.816 \times 10^{-6}$

Again, the temperature variations are well within spec.

Worst case calculated T range:

2.665×10^{-6} @ -32°F = -0.6% Relative to Amb.

2.755×10^{-6} @ +63°F = +2.64% Relative to Amb.

SECTION 3

TEST AND DEMONSTRATION SUMMARY

3.1 PERFORMANCE TESTS

The performance test procedure was designed to provide comprehensive measurements of all of the specified performance characteristics of the Battery Charger. Tests were established to check the extremes and an intermediate point on each current range under short circuit, full compliance voltage, and an intermediate voltage. Tests were included at nominal, high, and low line voltage for both 115 volt and 230 volt line conditions. In this way, all of the specified variables except temperature were injected into the performance test.

3.1.1 Current Regulation

The battery charger is required to regulate output current to a tolerance of +5%, -10% for all current settings under combined variables of input voltage and frequency, temperature, and load conditions covering short circuit up to the highest range of battery emf.

The reference condition for the +5%, -10% variation however was not specified. RCA chose as the logical reference condition the current into a short circuit at a nominal line voltage of 115 volts, 60 Hz and room temperature.

The specification dictated a meter having accuracy of +1% of full scale and a current adjustment settability of 5%. Test procedures and limits were set up based upon these specifications, one set of limits for initial setting and increased limits applicable to any combination of other conditions. These are shown in Table 3-1. The RCA test limits are tighter than the maximum limits of the spec.

Although the total allowable tolerances are considerably greater than +5, -10%, review of 8400 current measurements made in pre- and post-burn-in tests on all fourteen (14) units disclosed only one current reading below -10%, 13.4 mA versus 13.5 mA, relative to the set value of 15 mA. The highest positive percentage error was +5%, 52.5 mA versus the preset value of 50 mA.

Table 3-1. Specification Tolerances and Test Limits, Charging Current

Current Range mA	Current mA	Specification - Settability Tolerances				RCA Test Limits		Specification - Regulation Tolerances				RCA Test Limits	
		Meter ±1% f. s. mA	Settability ±5% mA	Limits mA Min.	Limits mA Max.	mA Min.	mA Max.	-10% mA	+5% mA	Limits mA Min.	Limits mA Max.	mA Min.	mA Max.
50	15	0.5	0.75	13.75	16.25	14.2	15.8	-1.5	+0.75	12.25	17.0	12.8	16.6
	30	0.5	1.5	28.0	32.0	28.8	31.2	-3.0	+1.5	25.0	33.5	25.9	32.8
	50	0.5	2.5	47.0	53.0	48.5	51.5	-5.0	+2.5	42.0	55.5	43.6	54.1
200	50	2.0	2.5	45.5	54.5	47.0	53.0	-5.0	+2.5	40.5	57.0	42.3	55.7
	100	2.0	5.0	93.0	107	96.0	104.0	-10.0	+5.0	83	112	86.0	109
	200	2.0	10.0	188	212	194	206	-20.0	+10.0	168	222	175	216
700	200	10.0	10.0	180	220	184	216	-20.0	+10.0	160	230	166	227
	400	10.0	20.0	370	430	378	422	-40.0	+20.0	330	450	340	443
	700	10.0	35.0	655	745	669	730	-70.0	+35.0	585	780	602	767

Data taken with 50 Hz input and at temperature extremes during first article test differed little from the 60 Hz room temperature data and was also within the +5%, -10% brackets.

3.1.2 Memory and Timing Circuit

The accuracy of the timing circuit was measured over a six minute period on each unit. The specified accuracy is ±5%. All room temperature data was within less than 2% and data at temperature extremes was within the 5% limits.

During the low temperature test, the memory circuit failed to operate because of low voltage from the memory battery. As result, the 9 V carbon zinc type BB90 battery was changed to an alkaline unit, type BB 3090 and the test was repeated successfully.

3.1.3 Maintainability and Human Engineering

During the maintainability demonstration, it became apparent that the timing circuit plug-in module could not be removed without use of a tool so the module retaining plate was used as the tool. This was considered to be a shortcoming and RCA agreed to modify the design to alleviate the problem for future units.

3.1.4 Reliability

The reliability demonstration revealed one workmanship problem. The hardware on one of the current adjustment potentiometers was not tightened properly allowing the entire potentiometer to rotate. No significant failures occurred.

3.2 ENVIRONMENTAL TESTS

As part of its Qualification Test requirement, the Battery Charger was subjected to the environmental tests discussed in this paragraph. The unit successfully passed all these tests except for contingencies in the case of the vibration and salt fog tests.

The battery charger, per se, incurred no damage in the vibration test, but the cushioning material in the transit case became permanently compression-set. Different cushioning material is being obtained and a retest will be conducted.

In the case of the salt fog test, several areas of corrosion were observed. They are due predominantly to either process or quality control problems and the test is considered passed subject to the corrective actions stated in paragraph 3.2.10 below.

Table 3-2 lists the environmental tests performed on Engineering Development Models, CLIN 0003, Model Numbers 1 and 2. These units successfully passed Conformance and Burn-in Tests prior to submission to Environmental Tests. The sequence of tests is as outlined in Table 3-2.

Table 3-2. Environmental Tests

Design Requirement	Environmental Test Requirement		
EL-CP2128-0001A Specification Paragraph	Unit Model Identification	EL-CP2128-0001A Specification Paragraph	Test Parameter
3.12.12	No. 1, 2	Section F.10(d) of S.O.W.	Burn-in
3.11.1	No. 1	4.6.1	Altitude
3.11.2 a	No. 1	4.6.2.2	Low Temperature
3.11.2 b	No. 1	4.6.2.1	High Temperature
3.11.3	No. 1	4.6.3	Humidity
3.11.7	No. 1	4.6.7	Salt Fog
3.11.4	No. 2	4.6.4	Dust
3.11.8	No. 2	4.6.8	Immersion
3.11.6	No. 2	4.6.6.1	Vibration
3.11.6	No. 2	4.6.6.2	Shock
3.11.8	No. 2	4.6.8	Immersion
3.11.5	No. 2	4.6.5	Fungus

3.2.1 Altitude Test

The altitude test was conducted in accordance with Method 500, Procedure I, of MIL-STD-810B. The equipment was subjected to a simulated altitude of 40,000 feet above sea level for one hour in its transit-storage, non-operating, mode. The chamber pressure was then increased to simulate an altitude of 10,000 feet and an operational test performed. The unit operated satisfactorily during and at the conclusion of the test.

3.2.2 High Temperature Test

The High Temperature Test was conducted in accordance with Method 501, Procedure II, of MIL-STD-810B. The unit was instrumented with termocouples and subjected to storage temperature cycling between 120° F and 160° F for 36 hours. After the storage cycling phase, the item temperature was stabilized at 145° F and an operational test performed. The unit operated satisfactorily during and at the conclusion of the test.

3.2.3 Low Temperature Test

The low temperature test was conducted in accordance with Method 502, Procedure I, MIL-STD-810B. The unit was instrumented with thermocouples. The unit was then subjected to a storage temperature of -70° F for a period of two hours following stabilization. The chamber temperature was then increased to -25° F and an operational test performed. During this test, after a storage period at -70° F followed by stabilization at -25° F, the memory circuit did not function. Investigation revealed the memory battery voltage to be only 3 volts as a result of this cold temperature. All other test parameters were satisfactory. The unit was retested using an alkaline battery in place of the zinc-carbon battery and the memory circuit functioned properly. The drawings have been changed to require, and all units were shipped with, an alkaline battery.

3.2.4 Sand and Dust Test

The sand and dust test was conducted in accordance with Method 510, Procedure I, of MIL-STD-810B. The unit was subjected to an air velocity of 1750 feet per minute with a dust concentration of 0.3 gms per cubic foot for six hours while at a temperature of 73° F. With the dust feed stopped, the temperature was increased to 145° F and the humidity held at less than 10 percent for 16 hours. The temperature was maintained at 145° F and the dust feed started and maintained as before for six hours. A visual inspection for

mechanical degradation and an operational test were performed at the conclusion of the test. There was no deterioration of any kind and the battery charger operated satisfactorily at the conclusion of the test.

3.2.5 Humidity Test

The humidity test was conducted in accordance with Method 507, Procedure II, of MIL-STD-810B. The equipment was subjected to a 24 hour drying cycle, a 24 hour conditioning cycle and five continuous 48-hour cycles. After completion of the five 48-hour cycles, the unit was conditioned at 73° F and 50% R. H. for 24 hours and then operationally test.

During this test one charging channel failed. The test was continued, however, and the remaining channels operated satisfactorily. Investigation at the conclusion of the test revealed the charging channel failure to be caused by a defective part (a fracture of the welded junction of the cathode lead of the A15-CR4 isolation diode).

A visual inspection at the conclusion of the test revealed areas of corrosion on the Battery Charger. The areas noted, and the recommended action for the corrosion and the defective part, and detailed in the paragraph below.

(1) Evidence of corrosion on power connector.

The power connector was corroded badly but functioned properly. This is a MIL connector specified for use by ECOM. The vendor has been contacted to determine whether or not the parts used were defective.

Corrective Action:

Verify that the part was defective. If not, ask for a new specification from ECOM.

(2) Evidence of corrosion at cover/chassis interface.

Very minor corrosion was observed at the chassis/cover interface. It was due to local abrasion of the iridite finish caused by repeated installation and removal of the cover of the EDM.

Corrective Action:

Since the corrosion was not considered to be of a significant amount, no action is planned.

(3) Evidence of rust on the power transformer.

There were small areas of rust observed on the transformer flange and housing. This transformer is specified to pass all tests to MIL-T-27 which includes immersion and moisture resistance per MIL-STD-202. MIL-T-27 allows for up to 10% peeling or cracking of paint and/or corrosion if operation is not affected. The transformer met this requirement.

Corrective Action:

Since the transformer met its requirements, this is not considered a failure and no action is planned.

(4) The terminal board was warped.

The terminal board absorbed moisture and warped. Its performance was unaffected.

Corrective Action:

An ECP has been proposed which would eliminate this board from future designs. The terminal board drawing SM-C-88931 has been ECN'd to require conformal coating with a UR coating per MIL-I-46058 in the event the ECP is not approved. This is not a functional failure, but conformal coating is required if the board is retained.

(5) Local point blisters on the back of the chassis.

These blisters occurred only at locations that has been riveted and brazed. It is believed that micro-cracks in the rivets, following grinding, entrapped corrosive brazing salts causing poor finish adhesion.

Corrective Action:

The vendor has been contacted and agrees more care is required during cleaning of this area or impregnating per MIL-STD-276 prior to finishing is required. Process control must be enforced.

(6) Corrosion on interlock switch.

Corrosion was observed on the roller and spring of the interlock switch. The switch was procured to MIL-S-8805 and is presumed to be a defective part.

Corrective Action:

The vendor will be contacted to determine compliance to MIL-S-8805.

Since none of these conditions affected performance, the Battery charger is qualified to the humidity environment. However, corrective action, as outlined above, will be taken.

3.2.6 Leakage (Immersion) Test

The leakage test was conducted in accordance with Method 512, Procedure I, of MIL-STD-810B. The test was performed prior to, and following, shock and vibration testing. The test item, in its transport mode, was immersed in water to a depth of 36 inches for 120 minutes. A visual inspection for any evidence of leakage and an operational test were performed at the conclusion of the test. There was no leakage during either test and the unit operated satisfactorily.

3.2.7 Vibration Test

The vibration test consisted of two parts as follows:

PART I (Use environment).

The equipment, in its transit case, was subjected to Method 514.2, Procedure XI, Part 2, of MIL-STD-810C. The test item was vibrated on a package tester, operated at 1-inch DA and 284 rpm, for a total of three hours. At the end of each 1/2-hour period, the test item was turned to rest on a different face. An operational test was performed at the conclusion of this test.

PART II (Transportation).

This test was conducted in accordance with EL-CP2128-0001, Para. 4.6.6.1a. The test item, in its transport mode, was instrumented with miniature accelerometers. The unit then was rigidly attached to a test fixture. The test item was vibrated along each of its three mutually perpendicular axes in accordance with the following:

(1)	Test Level:	1.5 g
(2)	Frequency range:	5 to 200 Hz
(3)	Time schedule:	84 minutes per axis
(4)	Sweep rate:	5 to 200 to 5 Hz in 12 minutes

A visual inspection and an operational test were performed at the conclusion of this test. The Battery Charger successfully passed this test. There was no damage of any kind to the Battery Charger and it operated satisfactorily at the conclusion of the test.

During the Vibration Part I, the cushioning material (Etha Foam) used in the transit case became permanently compression-set allowing the battery charger to move within the cushion. Although there was no damage to the battery charger, this cushioning material is considered unsuitable for this use. Different cushioning material is being obtained and a retest will be conducted.

3.2.8 Shock Test

The shock test was conducted in accordance with Method 516.2, Procedure V, of MIL-STD-810C. The unit, in its typical service mode, was placed on each face on which it could be placed practicably during servicing. Each edge was raised four inches and the unit was allowed to drop freely back to the bench top. The test was performed without incident and the unit operated satisfactorily at the conclusion of the test.

3.2.9 Fungus

The fungus test was conducted in accordance with Method 508, Procedure I, of MIL-STD-810B. The test item was opened during test exposure and all internal and external surfaces were sprayed with spore suspension. The test was continued for a period of 28 days. A visual inspection was performed at the conclusion of this test, and there was no evidence of any fungus growth.

3.2.10 Salt Fog Test

The salt fog test was conducted in accordance with Method 509, Procedure I, of MIL-STD-810B. The test item was placed in a salt fog chamber and exposed to a 5 percent salt solution salt fog at a temperature of 95° F for 48 hours. A visual inspection was performed at the conclusion of the salt fog test.

The failure criteria for salt fog are defined in specification EL-CP2128-0001A paragraph 4 as follows: ". . .corrosion of finishes and metals only. Such

corrosion shall be defined as any visible degradation of the equipment surface that can be attributed to flaky, pitted, blistered, or otherwise loosened finish or metal surface". By this definition there were several failures during the test.

It should be noted that this test was run on the same unit that had been subjected to the humidity test. These failures and the subsequent corrective action are detailed in the paragraphs below:

(1) Evidence of rust and corrosion on input voltage switch.

This switch is an MS part which is specified to meet the requirement of MIL-S-3950 which includes salt fog test requirements.

Corrective Action:

Verify with vendor that part complies with MIL-S-3950.

(2) Evidence of rust on battery holder positive contact locking screw.

These screws are made from 303 S. S with a type II passivate finish per QQ-P-35. The only area where rust was noted was on the knurled surface of the thumbscrew. It is believed the knurling tool used during fabrication had embedded impurities and transferred these to the knurled surface of the screw.

Corrective Action:

Notify vendor and verify process quality control.

(3) Corrosion on power connector has accelerated.

Corrective Action:

See item (1) of paragraph 3.2.5.

(4) Evidence of corrosion at cover/chassis interface.

There was no change in appearance from that at the conclusion of the humidity test.

Corrective Action:

No action is proposed.

(5) Evidence of rust on the power transformer.

Corrective Action:

See item (3) of paragraph 3.2.5.

(6) Warpage of terminal board has increased.

Corrective Action:

See item (4) of paragraph 3.2.5.

(7) Local paint blisters on the back of the chassis.

Corrective Action:

See item (5) of paragraph 3.2.5.

(8) Corrosion on interlock switch.

There was no change in appearance from that at the time of the conclusion of the humidity test.

Corrective Action:

See item (6) of paragraph 3.2.5.

(9) Corrosion products on banana plug receptacles.

There were green corrosion products on banana plug receptacles. This was minor, and was believed to be caused by local wearing of the nickel plating caused by insertion of banana plugs into the jacks during troubleshooting. These parts are supplied to MIL-P-55149/1.

Corrective Action:

Since the amount of corrosion was not considered significant, no action is planned.

(10) Evidence of rust on battery holder spring.

Battery holder positive contact pressure plate spring had rust on one end. This cadmium plated music wire spring has a screw passing through its I. D. The screw threads created wear on the plating resulting in the corrosion.

Corrective Action:

The spring material will be changed to type 302 stainless steel with a passivate finish.

(11) Evidence of corrosion on left rear nut plate.

This was the only nut plate in the entire chassis showing corrosion products. These nut plates are specified as stainless steel having a molybdenum disulfide coating.

Corrective Action:

Since this was obviously a defective part, no action is planned.

(12) Marking ink smear.

The ink used to mark the part number on the chassis became smeared. This is a vendor quality control problem.

Corrective Action:

Inform vendor to use correct ink.

(13) Evidence of corrosion at card basket interface.

There was evidence of corrosion on the P. C. Board card basket under screws and at joints. This was minor and was caused by local wearing of the iridite due to repeated removal of the card basket of this engineering model.

Corrective Action:

Since the corrosion was not considered significant, no action is planned.

SECTION 4

CONCLUSIONS AND RECOMMENDATIONS

4.1 CONCLUSIONS

4.1.1 Performance Characteristics

The battery charger met or exceeded all of its required performance characteristics and had adequate design margin to withstand overvoltage to 20% above high line voltage and any undervoltage condition without damage.

4.1.2 Environmental Resistance

Minor corrosion problems encountered in humidity and salt fog were largely attributable to failure of parts to meet their specified environmental resistance. No functional failure resulted.

The foam insert in the transit chest was inadequate for its intended purpose, exhibiting permanent deformation after the bounce tests. A new material was therefore selected for the insert and the tests were rerun.

The low temperature failure of the Leclanche type memory battery was corrected by substitution of an alkaline battery, which was incorporated into the design for all units.

4.1.3 Electro-Magnetic Interference

The Electro-Magnetic Interference (EMI) tests were passed satisfactorily, so the conclusion was that additional screening and shielding were not required. The dished area (which allows screens to be placed under the louvres) can be eliminated and the cover can be used to retain the modules, allowing elimination of the module retainer plate.

4.2 RECOMMENDATIONS

The following changes should be implemented in any future production of the battery charger.

(1) Eliminate resistor terminal board on back of panel and include those parts on either the power supply module or the timing module. This will reduce cost and eliminate the board warping problem noted in Section 3.2.

(2) Replace the specified switch per MIL-S-21604 with a more reliable switch with a more appropriate circuit configuration (double pole, six throw). Failure rate at assembly of the specified switches was approximately 50%. Switch connections were also unduly complex because of the switch contact configuration.

(3) Change the Memory Battery Test Switch, a momentary toggle switch MS21027-K281, to a simpler, less expensive pushbutton type switch M8805/72-005, the same as the Start Time Switch. A circuit change incorporated at integration of the first unit permits this substitution.

(4) Change the etch pattern on the power supply module to interconnect both back and front mounting pads for U1 and eliminate a terminal and jumper.

(5) Add test points on the Timing Circuit Module for U2-12 and U2-15 to facilitate module test and troubleshooting.

(6) Eliminate dished area around louvres on both sides of cover so cover will act as module retainer.

(7) Eliminate module retainer plate.

(8) Modify module basket and/or Timer Circuit Module stiffener design to make possible the manual removal of the Timing Circuit Module without use of tools.

(9) Reverse the position and marking of red and black binding posts on the panel so that the red positive terminal is on the right and the black negative terminal is on the left, the conventional location. Relocate + and - panel markings outside of terminals for better legibility.

(10) Change the positive battery holder contact pressure spring from cadmium plated steel to 302 stainless to eliminate corrosion.

(11) Increase the thickness of the mounting flange on the power transformer so the reinforcing washers under the mounting hardware can be eliminated.

DISTRIBUTION LIST

Defense Documentation Center
Attn: DDC-TCA
Cameron Station (Bldg 5)
Alexandria, VA 22314 (12)

Commander
Naval Electronics Laboratory Center
Attn: Library
San Diego, CA 92152 (1)

Commander
Naval Surface Weapons Center
White Oak Laboratory
Attn: Library, Code WX-21
Silver Spring, MD 20910 (1)

Commandant, Marine Corps
Hq, U.S. Marine Corps
Attn: Code LMC
Washington, DC 20380 (2)

Rome Air Development Center
Attn: Documents Library (TILD)
Griffiss AFB, NY 13441 (1)

HQ ESD (DRI)
L.G. Hanscom AFB
Bedford, MA 01731 (1)

HQDA (DAMA-ARP/Dr. F.D. Verderame)
Washington, DC 20310 (1)

CDR, Harry Diamond Laboratories
Attn: Library
2800 Powder Mill Road
Adelphi, MD 20783 (1)

CDR, U.S. Army Research Office
Attn: DRXRO-IP
P.O. Box 12211
Research Triangle Park, NC 27709 (1)

CDR, U.S. Army Signals Warfare Lab
Attn: DELSW-OS
Arlington Hall Station
Arlington, VA 22212 (1)

Commander
U.S. Army Mobility Eqp Res & Dev Cmd
Attn: DRXFB-R
Fort Belvoir, VA 22060 (1)

DISTRIBUTION LIST (Cont.)

Commander
U.S. Army Electronics Command
Fort Monmouth, NJ 07703

DRSEL-TL-DT	(1)
DRSEL-TL-P (Ofc of Record)	(1)
DRSEL-MS-TI	(2)
DRSEL-GG-TD	(1)
DRSEL-TL-DJ	(1)
USMC-LNO	(1)
DRSEL-GG-AR	(8)

NASA Scientific & Tech Info Facility
Baltimore/Washington Intl Airport
P.O. Box 8757, MD 21240 (1)

SUPPLEMENT TO DISTRIBUTION LIST

Mr. Don Mortel
Director, Aerospace Power Division
Attn: AFAPL/PO
Wright-Patterson AFB, Ohio 45433 (1)

Mr. E. Cohn
NASA Headquarters
Code RPP
Washington, DC 20546 (1)

Institute for Defense Analyses
Attn: Mr. Robert Hamilton
P.O. Box 55
Libertytown, MD 21762 (1)

Mr. Richard E. Oderwald
Department of the Navy
Hqs., U.S. Marine Corps
Code LMC 4
Washington, DC 20380 (1)

Commander
U.S. Army Mobility Equipment R&D Command
Attn: DRXFB-EE
Fort Belvoir, VA 22060 (1)

Commander
Harry Diamond Laboratories
Attn: DRXDO-RDD (Mr. A. Benderly)
2800 Powder Mill Road
Adelphi, MD 20783 (1)

Commander
Picatinny Arsenal
Attn: SARPA-FR-S-P
Dover, New Jersey 07801 (1)

Power Information Center
University City Science Center
3624 Science Center
Philadelphia, PA 19104 (1)

Office of Assistant Director
(Engineering Technology), ODDR&E
Rm 3D-1089
Attn: Mr. R.W. Ziem
Pentagon
Washington, DC 20301 (1)

SUPPLEMENT TO DISTRIBUTION LIST (Cont.)

Dept. of Transportation
Transportation System Center
55 Broadway
Attn: Mr. F. Raposa, MS IMP
Cambridge, MA 02142 (1)

AiResearch Manufacturing Company
Division of the Garrett Corp.
P.O. Box 5217
Attn: Librarian
Phoenix, Arizona 85010 (1)

Electro-Optical Systems
Xerox Corporation
Special Products & Systems Division
300 No. Halstead St.
Attn: Dr. S.J. Lindena
Pasadena, CA 91107 (1)

Boeing Company
Aerospace System Division
P.O. Box 3999
Attn: Frank Springgate
Seattle, WA 98124 (1)

Comsat Laboratories
P.O. Box 115
Attn: B. Free
Clarksburg, MD 20734 (1)

Delco Electronics
General Motors Corp.
6767 Hollister Avenue
Attn: J.F. Britt
Coleta, CA 93017 (1)

Duke University
College of Engineering
Dept. of Electrical Engineering
Attn: T.G. Wilson
Durham, NJ 27706 (1)

Electro-Optical Systems, Inc.
300 No. Halstead
Attn: R. Worlock
Pasadena, CA 91107 (1)

Engineered Magnetics Division
Gulton Industries, Inc.
13041 Cerise Avenue
Attn: Harry Linden (1)
George Lachenmeier (1)
Hawthorne, CA 90250

SUPPLEMENT TO DISTRIBUTION LIST (Cont.)

Fairchild Industries
Fairchild Space & Electronics Division
Attn: Mr. D. Robinson
Germantown, MD 20767 (1)

General Dynamics Astronautics
Department 963-2
5001 Kearney Villa Road
Attn: R. Schaelchlin
San Diego, CA 92100 (1)

General Electric Company
Missile & Space Division
Valley Forge Space Center
P.O. Box 8555
Attn: J.H. Hayden
Philadelphia, PA 19101 (1)

General Electric Company
Solid State & Electronics Laboratory
Corporate Research & Development
Attn: V.L. Stout
Schenectady, NY 12301 (1)

General Motors Corporation
General Motors Defense Research Lab
Attn: T.M. Corry
Santa Barbara, CA 93100 (1)

Honeywell, Inc.
Ordnance Division
600 Second Street, N
Attn: Lowell Westbrook
Hopkins, MI 55343 (1)

Hughes Aircraft Company
Space Systems Division
Attn: D. Garth
El Segundo, CA 90245 (1)

Lear Siegler, Inc.
Power Equipment Division
P.O. Box 6719
Attn: R.W. Hobel
Cleveland, OH 44101 (1)

Martin-Marietta
P.O. Box 179
Attn: R.S. Miller
Denver, CO 80201 (1)

SUPPLEMENT TO DISTRIBUTION LIST (Cont.)

North American Rockwell Corp.
Autonetics Division
P.O. Box 4173
3370 E. Anaheim Road
Attn: J.W. Adkison
Anaheim, CA 92803 (1)

TRW, Inc.
23555 Euclid Avenue
Attn: Library
Cleveland, OH 44100 (1)

TRW, Inc.
TRW Systems Group
One Space Park
Attn: H. Lurie 01/1210 (1)
L. Inouye 82/2367 (1)
A. Schoenfeld 82/2720 (1)
J. Biess 82/2389 (1)
Redondo Beach, CA 90278

Westinghouse Electric Corporation
Research Labs
Churchill Boro
Attn: Dr. Paul Pittman
Pittsburg, PA 15235 (1)